Docusign Envelope ID: EFC52467-A2A0-4DE2-91D5-216F30602930

1. INTRODUCTION

1.1 Preamble

Established in 1958, the Lucinda Bulk Sugar Terminal has a storage capacity of around 230,000 tonnes of raw sugar. The terminal is owned by Sugar Terminals Limited (STL) and is managed exclusively by QSL under an operating arrangement.

Queensland Sugar Ltd (QSL) have an ongoing commitment to maintaining plant and structures at the BSTs that it operates.

The Bulk Sugar Terminal (BST) where the WUC shall be executed is located at:

Lucinda Bulk Sugar Terminal – 2 Dungeness Road, Lucinda, QLD 4850

Figure 1: Lucinda Wharf & Jetty

Works for this Contract include structural repair and corrosion protection. They will be conducted on the 5.7km long Jetty.

Figure 2: A Typical Lucinda Jetty Pilebent consisting of a headstock and multiple piles

Docusign Envelope ID: EFC52467-A2A0-4DE2-91D5-216F30602930

1.2 Construction Schedule

The works on the Jetty piles and headstocks are to be carried out over a multi-year period as per the Contract.

A listing of WUC for the jetty piles and headstocks is contained in Appendix D.

The works are to be completed according to the Contract Program and it is not permitted to accelerate the works without a written direction to do so by the Superintendent.

Mobilisation to start following tail end works

The Principal is undertaking works to the tail end of the Jetty in early 2025 that will restrict access. These are expected to be completed by June 2025. However, in the event of delay to the recommencement of access to the Jetty the Contractor will not be able to mobilise. Where there is a delay due to this cause, the Contractor will be entitled to an extension of time, but no delay costs or damages as result of the delay will be payable.

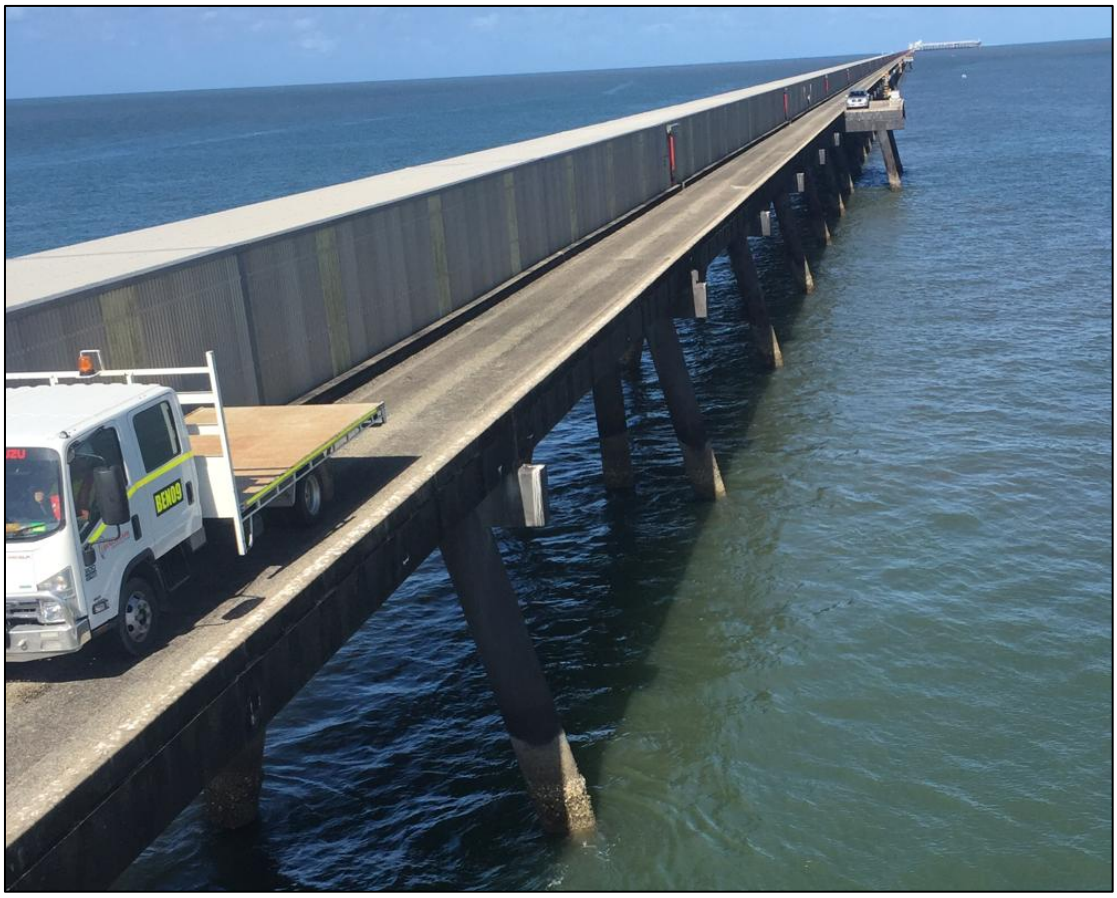

Figure 3: Roadway section

1.3 Interpretation

Capitalised terms used in this Detailed Specification have the meanings assigned to them in the General Conditions of Contract or the General Specification (if any) unless the context otherwise requires.

Docusign Envelope ID: EFC52467-A2A0-4DE2-91D5-216F30602930

2. SCOPE OF WORKS

2.1 General

Without limiting any other requirement of the Contract, the scope of works (SOW) for the WUC includes::

1. Site Establishment & Inductions;
2. Administration and Documentation;
3. Development, maintenance and operation of safety, environment and quality management plans.
4. Preparation, treatment, and repairs as required to perform the WUC in accordance with the Specification;
5. Completion of WUC in accordance with the Scope;
6. Clean-up and demobilise.

2.2 WUC on jetty piles and headstocks

Figure 2 shows a typical pilebent on the LBST Jetty consisting of a headstock and multiple piles. The Jetty Pile and Headstocks WUC consists of remediation of nominated headstocks plus nominated piles that form part of the same pilebents. The majority of pilebents on the structure are included.

QSL have been completing a program of repairing piles and applying a petrolatum protective jacket system using the Jetty Maintenance Vehicle (JMV). The piles included in the WUC are those that have not been and are not expected to be wrapped under that separate program using the JMV. The nominated piles have generally been chosen as those that have sustained significant corrosion and require substantial welded repair.

2.2.1 Nominated piles and headstocks

Appendix D contains a listing of nominated pilebents and whether the WUC for each pilebent includes only headstock works or includes headstock works plus nominated piles or other items.

The WUC on each pilebent is allocated to a particular separable portion.

2.2.2 Headstock works

At each nominated pilebent the WUC includes:

1. Provision of safe access
2. Removal of the petrolatum tape jacket systems and any other tape systems to a minimum 600mm below the headstock as per drawing QSL2501-JPHR-G01 in Appendix A. The remaining petrolatum tape shall be protected by masking with a suitable product during further processes.
3. Removal of petrolatum tape around the gallery feet and masking of sliding surfaces to avoid damage from abrasive blasting and painting as per drawings QSL2501-JPHR-G01 and QSL2501-JPHR-G02 in Appendix A.
4. Cleaning of all surfaces by high pressure water blasting or similar including de-greasing of surfaces as required.
5. Inspection of corroded areas including thickness testing and recording as per section 4.1.2
6. Replacement of deck unit keeper angles as per drawing QSL2501-JPHR-G02 in Appendix A.

Docusign Envelope ID: EFC52467-A2A0-4DE2-91D5-216F30602930

7. Welded repairs as approved by the Superintendent in accordance with drawings in Appendix J or similar as updated – see section 4.1 for further details.
8. Abrasive blasting and application of the protective coating system as per requirements of this specification including Appendix A and Appendix E.
9. Reinstatement of petrolatum tape jacket systems.
10. Reinstatement of petrolatum around conveyor gallery feet as per drawing QSL2501-JPHR-G02.
11. Installation of elastomeric block and pouring of epoxy for each deck unit keeper angle as per drawing QSL2501-JPHR-G02, Appendix A.
12. Safe access and pile remediation works as below for nominated piles.
13. Safe access and underpass remediation works as below for nominated underpasses.
14. 2-week hire of scaffold access system for expansion joint pilebents, to allow Principal works (see below)

2.2.3 Pile works

Where piles are nominated as part of the WUC for a pilebent the piles should, subject to the Contractor's methodology, be completed concurrently with the headstock works for that pilebent. The WUC for each nominated pile include:

1. Provision of safe access to the pile to allow installation of jacket down to a level of ~1.7m LAT
2. Removal of marine growth to jacket extent
3. Surface preparation by high pressure water blasting, minimum 5000psi, plus scraping or other means to remove all flaking paint, loose corrosion and marine life.
4. Inspection of corroded areas including thickness testing and recording as per procedure section 4.
5. Welded repairs as approved by the Superintendent in accordance with this Specification and drawings Appendix J or similar as updated – see section 4.1 for further details
6. Application of Denso SeaShield 2000FD system as per Appendix G

2.2.4 Underpass works

For nominated underpasses the works include treatment as per drawing QSL2501-JPHR-G03 in Appendix B inclusive of:

1. Abrasive blasting and protective coating in accordance with the specification Appendix E and requirements Appendix B
2. Application of corrosion protection tapes to structural members as per Appendix B

2.2.5 Expansion joint pilebents

Expansion joint pilebents have been nominated as "optional provisional, if ordered". Refer to clause 3 of the General Conditions of Contract. The timing of these items will be as stated in the applicable Direction (if any) but, if ordered, will be ordered so as to coincide with other WUC on the Jetty.

The expansion joint pilebents require additional works that will be completed by the Principal that includes lifting of the roadway by jacking from the headstock, and installation of new sliding plates. (Note: when the first one or two expansion joints are being completed the Contractor will be invited to view the process and optionally provide a variation price to carry out the remaining expansion joint works).

The WUC for expansion joint pilebent works includes the following:

- Provision of access system with modification if required to allow the roadway to be raised approximately 200mm.

Docusign Envelope ID: EFC52467-A2A0-4DE2-91D5-216F30602930

- Cleaning of all surfaces by high pressure water blasting or similar including de-greasing of surfaces as required.
- Inspection of corroded areas including thickness testing and recording as per section 4.1.2
- Hire of scaffold access system for up to 2 weeks
- Provision for allowing Principal's works to occur on the pilebent including allowing for closure of roadway during lifting of roadway girders
- Remainder of works as per standard pilebents (excluding deck unit keeper angle replacement).

Figure 6: Expansion joint lifting to be carried out by others

2.3 C7B conveyor gallery WUC

Corrosion protection wrapping of the steel members of nominated conveyor gallery bays have been included in the WUC. This item provides long-term corrosion protection to the structure but has primarily been included in this contract to help the Contractor to manage the impacts of unsuitable weather such as high humidity.

WUC include:

1. Provision of access as required (platforms, step ladders, access over belt)
2. High pressure water blasting of nominated sections
3. Inspection of nominated sections for holes or deep pitting due to corrosion
4. Supply and application of petrolatum tapes and topcoat materials as per drawing QSL2501-JPHR-G04 in Appendix C and any other requirements noted therein.
5. Cleanup of area including conveyor belt.

Access restrictions apply to the conveyor gallery during shipping activities as detailed in Section 3.

Docusign Envelope ID: EFC52467-A2A0-4DE2-91D5-216F30602930

3. SITE, ACCESS AND GENERAL REQUIREMENTS

3.1 Regulations, specifications and standards

The Contractor will be responsible for obtaining a Port of Townsville Blasting and Surface Coating permit available at www.townsville-port.com.au/operations/permits-forms/

3.2 The Site

The Site, in which the Contractor is nominated as Principal Contractor, will vary throughout the length of the contract depending on the stage of the Works. Access to and Possession of the Site shall be granted in accordance with the General Conditions of Contract. Unless otherwise directed, the Contractor shall not carry out WUC in areas where it has not been granted possession in writing.

Where the Contractor demobilises from the Site for a period, for example over the wet season, they shall clean up and relinquish access to the Site areas on the jetty. The onshore storage areas may be retained as part of the Site.

3.2.1 Jetty pile and headstock works

The Site includes of:

i. The section of the Jetty between passing bays where the WUC are being undertaken.
ii. One or more Jetty passing bays adjacent to the section of the Jetty where the WUC are being undertaken and where the Superintendent has directed these to be included in the Site for storage of the Contractor's materials and equipment.

See Drawing 1122-CTQ-001 for the locations of passing bays.

3.2.2 C7B conveyor gallery wrapping

The Site includes of:

iii. The interior of the C7B conveyor gallery where the WUC are underway, as well as the adjacent galleries as required for access and storage of materials and equipment.

3.2.3 Onshore storage area

An onshore storage area may be granted as part of the Site upon request by the Contractor. The Contractor will be responsible for establishing this area including provision of security, vehicle access and any other requirements. The location of this area is seen in the blue rectangle Figure 4 but does not include the entire area. The Contractor will be given access to a sufficient portion of this area as required to support the WUC. The area must be kept neat and tidy. Note that the area does not have a power connection.

Docusign Envelope ID: EFC52467-A2A0-4DE2-91D5-216F30602930

Figure 5: Onshore storage area location

3.2.4 Area adjacent to onshore crib room

An area adjacent to the onshore crib room will be granted as part of the Site upon request by the Contractor. The Contractor will be responsible for establishing this area including provision of security, vehicle access, services and any other requirements. The location of this area is seen in Figure 5. The area must be kept neat and tidy.

Figure 6: Area adjacent to onshore crib room

Docusign Envelope ID: EFC52467-A2A0-4DE2-91D5-216F30602930

3.3 Crib Room and office facilities

There is a crib room available for use both onshore and offshore. The onshore crib room facility is used by all contractors working on the site. The offshore crib room facility is used by both contractors and QSL staff as required. Both facilities contain a toilet facility.

The Contractor may make use of the offshore first aid room as an office facility.

The Contractor shall supply and maintain one portable toilet facility on the passing bay that has been provided to the Contractor as part of the Site under their control and management.

3.4 Site inspection

Shortly after the Date of Acceptance of Tender, the Contractor will arrange a time to visit the Site with the Superintendent to conduct a site assessment both on the wharf deck as well as via the Principal's workboat to assist with planning and development of management plans.

3.5 Site Hours

Refer to Annexure Part A Item 42 for the applicable Working Days and Working Hours.

The Site will generally be available 24 hours a day, seven (7) days a week. Standard BST site terminal hours are 7:00am to 4:00pm Monday to Friday. Where night works are included in the Working Hours, the Safety, Environmental and Quality Management Plans will need to include all controls and requirements to ensure WUC carried out at night proceeds safely and in accordance with requirements of the Contract as to quality. Works with high levels of noise will not be permitted at night where that noise impacts residents of the Lucinda township. Commencement of night works is subject to the approval of the Superintendent following submission and implementation of the management plans.

Refer to clause 31 of the General Conditions of Contract. Where the Contractor wishes to work longer hours than the Working Hours identified in Annexure Part A Item 42, the written approval of the prior Superintendent must be obtained in accordance with clause 31 of the General Conditions of Contract. Application for such approval must be accompanied by a risk assessment that describes and provides mitigations for safety, environmental and quality risks associated with the longer work hours. If the longer work hours are approved by the Superintendent, the Contractor shall submit updated management plans for review and approval by the Superintendent prior to commencing the longer work hours. Any additional costs as a result of longer work hours shall be borne by the Contractor.

3.6 Site access

The Contractor must maintain a sign-in register showing their personnel and visitors who are within the LBST site at any time. This register must be able to be given to QSL staff on request and during an emergency. Contractor's personnel will not need to sign in at the Principal's office.

Site access cards will be issued to the Contractor prior to commencement of works. Access is generally through the front gate at the terminal, but during shipping events the entry point is to the rear of the terminal and is monitored by 24-hour security.

If a ship is at berth, it's possible that personnel will require Maritime Safety Identification Cards to access the wharf and this may include the Jetty. If such security is implemented, work may continue in groups where at least one person from each group holds an MSIC and therefore becomes responsible for all others working in the group. Under such arrangements, the MSIC holder must maintain a close proximity and visual contact with personnel until such time as they leave the security area.

Docusign Envelope ID: EFC52467-A2A0-4DE2-91D5-216F30602930

3.7 Site and jetty vehicle access

The speed limit on the LBST site is limited to 20km/h. On the jetty the speed is limited to 10km/hr on the tail section and 40km/hr along the general run of the jetty (speed camera enforces speed limits), the Contractor is to ensure that their personnel observe these maximum speed limits.

Persons using the Jetty are to observe the following rules:

a. Headlights are to be switched on when driving down the Jetty.
b. There are 6 passing bays down the length of the single lane jetty roadway, in the case of oncoming traffic the closest car to a passing bay is to pull into the passing bay to allow for the other vehicle to pass.

The JMV straddles the Jetty roadway, this vehicle is designed to allow light vehicles to pass under it, however larger vehicles or loads will most likely require that the JMV is removed from the Jetty roadway to either a passing bay or back onshore. Moving the JMV from the jetty roadway is not preferred and is to be avoided where possible, especially for extended period as this is high use machine. The Contractor will need to advise the Superintendent at least two days prior to requiring that the JMV be moved.

The JMV has a clearance underneath of approximately:

2.33m Width

2.15m Height

There is a general 8 Tonne gross load limit on vehicles using the Jetty.

Vehicle parameters:
Maximum Gross Weight = 8 tonne
Maximum Height = 2.1m
Maximum Width = 2.0m
Speed Limit = 40 kph

Where the Principal implements traffic management for other activities the Contractor shall comply with all directions as to Traffic Management on site as directed by the Terminal Manager or their delegate(s).

Personnel must adhere to all marked pedestrian movement walkways where applicable.

3.8 Wharf parking

Unless otherwise agreed with terminal personnel at the daily pre-start, the Contractor must not have more than 2 vehicles parked on the wharf.

3.9 Vehicle hazard to personnel on roadway

The Contractor must enforce a lower speed limit on the jetty roadway in areas where it is working. Where works are underway inside the conveyor gallery the contractor must ensure safety of personnel entering and exiting the gallery. This includes at a minimum:

- Providing warning signage and a lower speed limit in the vicinity of where workers are accessing the gallery.

Docusign Envelope ID: EFC52467-A2A0-4DE2-91D5-216F30602930

- Providing barriers at the gallery door exits that serve to ensure personnel exiting the gallery stop and look for vehicles prior to entering roadway. This includes providing a warning area and speed control signs outside of any area where the contractor is working inside the conveyor gallery.

3.10 Use of gantry structures on jetty

The Contractor may employ one or more mobile gantry structures on the Jetty to hold equipment or scaffolding components while allowing vehicles to pass underneath.

The operational procedure for the gantry structure must be submitted for approval by the Superintendent prior to mobilising the structure to site. The following requirements must be met:

- The structure must have a minimum clearance width of 2.4m and a minimum clearance height of 3.2m.
- The design of the structure must be certified by an RPEQ engineer
- Consideration must be made for securing the structure in the event of a cyclone, unless it can be removed from the Jetty in a suitable timeframe.
- An operational and environmental risk assessment must be submitted covering potential hazards associated with the use of the structure.
- The wheel/pad loadings of the structure must not overstress the Jetty roadway girders. The Contractor must provide a loading report for the proposed structure prior to fabrication. QSL will engage independent structural engineers to assess the impacts on the jetty and share this assessment with the Contractor. The Contractor must modify their design based on the results and recommendations of this assessment. The costs of modifying the structure design and meeting the requirements stipulated by the structural engineer shall be borne by the Contractor. Note that there is considerable leeway in the 8t load limit depending on the design, wheel configuration and load distribution of the proposed gantry. For example, the JMV has a total weight of around 18t but has a very wide wheel-base and other features to reduce wheel loads and thus reduce the resulting bending moment induced on the girders/structure, which has previously been identified as the critical design criteria condition. The maximum allowable ultimate limit state moment capacity for the Deck Live Load has previously been assessed to be 964 kNm which is governed by the structure remaining in fair/as designed condition. The moment applied by any proposed gantry must be significantly below this value with allowance for light vehicles passing under.

3.11 Obligation to maintain access along jetty

The Contractor shall facilitate access for vehicles through the Jetty Site (that portion of the Site that includes the jetty roadway) in accordance with the methodology contained at Annexure Part E of the Contract (Methodology).

The Contractor must allow for vehicles to be able to pass through the Jetty Site to access the offshore structure. The following minimum requirements will apply unless otherwise agreed as part of the Contractor's tender submission.

3.11.1 Communications and planning

The Contractor must:

- Have a representative attend the daily site pre-start meeting
- Liaise daily with the nominated BST staff member to advise proposed works for the day and seek information on BST staff or others' movements along the Jetty.
- Provide a procedure for BST staff and others to pass through the Jetty Site. This procedure must be communicated by signage at each end of the Jetty, in the BST office and BST staff crib room. The procedure must not require a site induction process or specialised equipment (except for a mobile phone).

Docusign Envelope ID: EFC52467-A2A0-4DE2-91D5-216F30602930

- Ensure a member of the Contractor's personnel is available to co-ordinate and manage the process of vehicle access through the Jetty Site, including being available for communication by radio and mobile phone.

3.11.2 Emergency access

- The Contractor must develop, implement and test a plan to ensure that there is less than two minutes of delay where emergency services access is required through the Jetty Site.

3.11.3 General access

During Bulk Sugar Terminal (BST) site working hours of 7am to 4pm Monday to Friday, and except during shipping activities:

- The Contractor must ensure vehicles seeking to pass the Jetty Site shall experience a wait time of no more than 10 minutes.
- The Contractor must make available 15-minute windows where vehicles may pass the Jetty Site with a wait time of no more than 3 minutes, These windows shall be at regular times each day as co-ordinated with BST staff and include one in the morning, one prior to lunchtime, one after lunchtime, and one at the end of the day.

3.11.4 Closure periods during BST site hours

During working hours of 7am to 4pm Monday to Friday, except for during shipping activities. The Contractor may implement closure periods of up to 3 hours duration. The Contractor will be entitled to enact such closures at least 3 times per week, but may be permitted to enact closures more frequently where the Principal does not require access to the wharf. During these periods the Contractor may, except during an emergency, prevent all vehicles from passing the Jetty Site. Closures must be communicated with a minimum of 5 days' notice. Closures must be clearly communicated by signage at each end of the Jetty, in the BST office and BST staff crib room.

The Superintendent may, by giving a minimum of 5 days' notice, prevent the Contractor from implementing closures on particular days where the Principal requires continuous access for major operational, construction or maintenance activities.

3.11.5 Full closure: Outside of BST site working hours or where Principal does not require access

Outside of the hours of 7am to 4pm Monday to Friday, except during shipping activities, and where there are no other staff or contractors working offshore of the Jetty Site, the Contractor may implement a full closure. During this period, it is not necessary to allow for emergency access, except for emergencies associated with the Contractor's works.

Where the Principal has no planned activities on the wharf or Jetty during working hours and agrees in writing, the Contractor may implement a full closure.

(Note to tenderers: tenderers may describe their requirements for other full closures in their tender where this is required for their chosen methodology. The details may then be negotiated following the tender period and incorporated into the contract. It is expected that the Principal will be able to accommodate reasonable requests by scheduling their own activities to suit).

3.11.6 During shipping activities

Shipping activities include the period where a vessel is berthed on the wharf and any periods prior to berthing and after departure during which the Principal will carry out testing and cleanup activities.

During shipping activities the Contractor must ensure that access through the Jetty Site is continuously maintained with wait times of less than 5 minutes.

Docusign Envelope ID: EFC52467-A2A0-4DE2-91D5-216F30602930

3.11.7 Passing bay included in Site

Where the Site includes one or more passing bays for storage of Contractor's materials, equipment and amenities, the Contractor must allow sufficient space for at least one vehicle to pull into the passing bay to allow an oncoming vehicle to pass.

3.12 JMV does not need to pass the jetty site

The JMV will continue to be in operation during the contract period. However, the Contractor need not generally allow for the JMV to be able to pass the site. However, if the Contractor's methodology does not include demobilising over the wet season then it must allow the JMV to pass through the Site at least once per calendar year.

3.13 Safe access

The selection and establishment of a suitable safe access system is entirely the responsibility of the Contractor. Shipping activities must still be able to occur without demobilising the safe access system.

The access system employed for the headstocks must allow for safe inspection by a third party inspector or the Superintendent using appropriate safety equipment. It is acceptable for the Contractor to require that these personnel have a 'working safely at heights' qualification if this is required for the chosen access system. The access system for the piles does not need to allow for access by the Superintendent or nominated inspector. For example, it would be acceptable to use rope access methodologies for the works on the piles.

The Contractor may remove underpans underneath the conveyor gallery to assist with access or services. The Contractor shall be responsible for replacing the underpans and rectifying any damage that has occurred because of their removal and replacement. Underpans must be replaced or the void otherwise secured and covered to the satisfaction of the Superintendent prior to any shipping event.

Figure 6: Removable underpans underneath the conveyor belt

Docusign Envelope ID: EFC52467-A2A0-4DE2-91D5-216F30602930

3.14 Shipping activities and conveyor gallery

The WUC area will need to be made safe for shipping activities within a 2-day notice period. This includes making safe of access systems inside the conveyor gallery and replacing any removed underpans underneath the conveyor belt. The Contractor will be permitted to continue works on the Jetty with the following restrictions:

- The Contractor must not access the northern side of the conveyor gallery
- Other access to the conveyor gallery during shipping activities must be minimised and is subject to completion of a risk assessment and appropriate controls being implemented.
- Wrapping of the C7B gallery internal steelwork will not be permitted during shipping activities.

Outside of shipping activities, the Contractor's personnel must use a personal lock on a lock-out box, in accordance with the Principals LOTO procedure, that isolates the conveyor operation when working within the footprint of the lanyard pulls of the belt. This includes any access through the conveyor underpans.

The Principal will be responsible for carrying out the isolation on the belt. The Principal will only carry out isolations during terminal working hours and must generally be given at least one day's notice. The Contractor will be responsible for providing Red Personal Locks, keyed only for an individual, for each of their employees to lock on to the Lock Hasp / Box for the duration of the works. Red Personal Locks must be removed prior to leaving site each day else the responsible personnel may be asked to return to site at their own cost to remove locks after hours if equipment is required to be put back into service prior to the Contractors next working day.

The conveyor belt must not be used as an area for placement of tools and materials. This requirement is due to the risk of personnel leaving tools and equipment on the belt that may cause severe damage and inability to export sugar should they remain on the belt during operation.

The conveyor belt and access systems shall be inspected at the completion of each work day to ensure no items are left on the belt. Prior to shipping activity or completion of an area this inspection must be carried out, documented and such documentary evidence sent to the Superintendent.

3.14.1 Historic shipping data

Previous data for number for shipping events at Lucinda Bulk Sugar Terminal					
	2021	2022	2023	2024	2025
Jan-June	No Data	2	2	4	2 (ongoing)
July-Dec	10	11	9	10	-

The data provided above is only a guide as to future trends and actual shipping in any year can be dependent on the market conditions for that year or other factors. A typical shipping event lasts for 3-4 days depending on ship size. Breakdowns or rain can cause delays. Upcoming and previous shipping events can be viewed at the following link, noting that there is often minimal notice of future shipping events.

Port of Townsville Shipping Schedule

Docusign Envelope ID: EFC52467-A2A0-4DE2-91D5-216F30602930

3.15 Air

There is an air line in the C7B conveyor gallery. The compressor feeding this line is located onshore. The air volume/pressure is generally not sufficient for abrasive blasting works but is generally suitable for air tools or minor spot abrasive blasting etc. The Contractor may use this air on the following conditions:

- Contractor to supply all hoses and fittings as required
- The Principal does not warrant the availability or suitability of the air source. The Principal will, however, arrange to repair the compressor or air supply in a reasonable time commensurate with the nature of the breakdown.
- The Contractor must ensure all air connections and lines are properly secured to totally eliminate the possibility of fouling with the belt during shipping activities or belt operation.
- Where this compressed air is used for spot abrasive blast cleaning, the Contractor shall check that the oil and water traps are empty. Compressed air shall be tested as per ASTM D4285-83 - Standard Test Method for Indicating Oil or Water in Compressed Air. Maintenance and air quality testing shall be conducted at regular intervals and at least once per day.

3.16 Water

There are fire hydrant water points at regular intervals on the Jetty that supply water. The Contractor may make reasonable use of the water. The Contractor is responsible for supplying all necessary fittings. Note the water is not tested and certified as potable for drinking.

3.17 Power

There are no electrical outlets available for use along the jetty. The existing outlets were installed as part of a communication system and do not provide suitable power for other purposes due to voltage drops along the length of the Jetty. These points are not to be used by the Contractor.

3.18 Cyclones

During cyclone season (1 November to 30 April), the Contractor must maintain an appropriate cyclone readiness procedure with tasks at each cyclone level of green, yellow and orange in accordance with the Port of Townsville categories (https://www.townsville-port.com.au/operations/safety-security/emergency-procedures/cyclones/). The Contractor must enact their plan throughout the cyclone season and when the risk level increases during a cyclone event. The following minimum requirements apply:

During the cyclone season (condition Green)

- All mobile buildings must be tied down appropriately,
- Where the Contractor leaves site temporarily, all materials and equipment must be secured against cyclonic winds.

During condition yellow/orange

- All loose items must be removed or appropriately restrained,
- All vehicles and mobile equipment must be removed from the Jetty,
- Scaffold encapsulation must be removed, and lower scaffold decks must be removed where possible,
- All personnel to evacuate at condition orange when the direction is given by the Principal, Superintendent, or the Port of Townsville.

Docusign Envelope ID: EFC52467-A2A0-4DE2-91D5-216F30602930

The Contractor shall consider the risk of storm surge in their cyclone planning noting the onshore storage area may be subject to flooding due to storm surge.

3.19 Costs for cyclone event preparation

The costs for carrying out preparations in accordance with condition green and managing general cyclone readiness procedures shall be borne by the Contractor.

The reasonable costs of carrying out of preparation activities as part of condition yellow/orange shall be borne by the Principal and claimed as a Variation.

3.20 Site specific safety requirements

The Contractor's attention is drawn to clauses 11A, 12 and 12A of the General Conditions of Contract. Nothing in this clause 3.20 shall be taken to limit or exclude any obligation or liability of the Contractor under the General Conditions of Contract or at law in relation to work, health and safety and the environment

3.20.1 Fitness for work (including impairment and fatigue management)

The Contractor is responsible for ensuring that the Contractor's Personnel are fit for work at all times. QSL has a 0% Breath Alcohol Concentration (BrAC) limit for personnel working at Bulk Sugar Terminals. Legal drug use that may impair a person's ability to work, as well as illegal drug use will not be tolerated.

Drug and Alcohol Testing is conducted randomly on QSL sites and must be completed by all personnel in attendance at the time. Failure to comply with this requirement will result in exclusion of the person from Site for the remainder of the Contract.

Fatigue can pose serious risk to safe work. QSL therefore requires that the following minimum controls be implemented:

- Ensure that no employee works greater than 13 hours. This includes 12 hours for the shift with an allowance of 1 hour for shift change over. (Excluding emergency events that require risk assessment and appropriate control measures)
- Provide an adequate period of rest between each rostered day on. A minimum of 10 hours break is required between each work shift.
- Ensure that no more than 7 work periods are worked consecutively.
- Ensure that a minimum of one 24-hour break is taken every 7 work periods.

Any exception to these requirements will require approval from the Superintendent.

3.20.2 General equipment

All electrical equipment requires a current test and tag (battery powered equipment using less than 40V is excluded from this requirement).

Due to previous safety issues and investigations into acceptable risk, handheld grinders must meet all of the following minimum safety criteria:

- Anti-vibration handle attached
- Dead-man switch
- Constant speed control
- Kickback protection control

Docusign Envelope ID: EFC52467-A2A0-4DE2-91D5-216F30602930

- Overload protection control
- Soft-Start speed control
- 0-Voltage restart protection control
- Disc guard

When conducting initial investigations, the only cordless handheld grinder that QSL could find that met the above criteria was the ***Milwaukee M18 Fuel***; there may be other alternatives, but they must comply with the above criteria.

Grinders with discs larger than 125mm are not permitted to be used on Site.

3.20.3 Working on the jetty and wharf (drowning risk)

The Contractor must provide edge protection whenever there are Works within 2 metres of an unprotected edge where there is a risk of drowning. Where personnel are within 2m of an unprotected edge or there is a risk of falling and drowning, they shall wear a personal flotation device and not be working alone.

3.20.4 Materials presenting health risks if disturbed

Dust generated due to work being conducted on Site poses serious health risks. Asbestos, Synthetic Mineral Fibres (SMF), Respirable Crystalline Silica (RCS), and Lead Based Paints are some examples of such materials that may be present on Site that are generally safe if left undisturbed, but have substantial health risks otherwise.

As required by law, QSL maintains Asbestos Registers for all BSTs, and the Contractor is responsible for reviewing these registers if the work they are completing may disturb such areas.

For other such material hazards, the Contractor is responsible for following due diligence protocols, including taking samples and testing to confirm; the results of which will be provided to QSL.

3.20.5 Drone use

The use of drones on QSL sites is generally accepted for inspections. However, the Contractor is responsible for ensuring they meet all current CASA requirements including holding an ARN, Remote Pilots License (RePL), or Remote Operator's Certificates (ReOC) as required, and notifying CASA before flying.

The Contractor must send out an email notification with relevant pilot, drone, and flight details to QSL's Representative, the governing Port Authority, and in the case of Cairns and Townsville, the local Defence Force Coordinators. This email notification must be made at least 48 hours in advance of intended flight.

3.20.6 Storage of material and equipment

As a minimum, all materials and equipment on the Site shall be stored in a manner that prevents mechanical or environmental damage, and storage areas will be kept neat and tidy to minimise potential hazards.

When flammable or combustible materials are to be stored or used on the Site; the Contractor will consult with the Terminal Manager, and shall adhere strictly to any instructions given.

Drums, liquid or gas containers are to be stored away from locations where they could be struck by vehicles and other equipment.

- Drum Storage Sufficient bunds or containment must be provided for drums to contain at least one full drum and 25% of the maximum amount likely to be stored in the location. Drains valves are to be kept closed at all times. Any accumulated stormwater which contains oil or an oil film must be

Docusign Envelope ID: EFC52467-A2A0-4DE2-91D5-216F30602930

diverted through an oil separator before discharge. Accumulator type drum storage pallets are permitted for drum storage.

- Gas Cylinders must be stored in a cool, dry and well ventilated place away from combustibles and areas where people are likely to congregate.
- Temporary bunding or dams must have prior approval by Terminal Management before installation.

The Contractor will liaise with the QSL site Supervisors during initial mobilisation to ensure equipment and products are stored appropriately.

The Contractor must ensure they have SDS's for all of the materials they are responsible for while on the Site.

3.20.7 Tank or pit overflows

Persons engaged in refuelling operations or in the filling of tanks or pits must remain at the fill point while this is in progress. Under no circumstances are fuel lines, filling hoses or fuel bowsers to be left running unattended. Fuel dispensing nozzles shall be fitted with automatic cut-offs.

3.20.8 Stormwater

No materials or wastes are permitted to enter drainage systems. Materials should not be stored in locations where it could be released into or otherwise block stormwater drains. Any works must be planned and completed in such a fashion to ensure storm and roof water does not contact sugar or other products or contaminants.

3.20.9 Dry spillages

Bulk products and building materials must be correctly enclosed or covered during transport. Any spillage from tipping or loading operations must be swept up or otherwise collected and placed in the stockpile.

Where dusts may be dispersed in the vicinity of occupied premises measures for dust control such as water sprays or vacuum collection must be used.

3.20.10 Wet spillages

Liquids must be contained so as to prevent entry to drains and gutters. Portable or temporary barriers including cracker dust and sand may be used to contain liquid spillages. Spilled liquids wherever possible should be recovered without contamination and reused. Contaminated materials must be stored correctly and labelled before disposal.

Where the Principal deems it necessary to undertake a clean up or engage a third party to undertake a clean up due to the Contractor's activities, then the cost incurred by the Principal in doing so shall be a debt due and owing to the Principal by the Contractor.

3.20.11 Odour

All noxious or offensive odour must be kept to a minimum. Consideration of the effects of odours which are dispersed by prevailing breezes must be taken into account when storing materials or odorous products.

3.20.12 Noise

Wherever possible, noise minimisation measures should be followed to reduce noise levels and the likelihood of a noise complaint.

The general environmental noise limits levels are shown in the table below.

Docusign Envelope ID: EFC52467-A2A0-4DE2-91D5-216F30602930

Time	Environmental Noise Limit
7 am – 6 pm	Background + 10 dB(A)
6 pm – 10 pm	Background + 10 dB(A)
10 pm – 7 am	Background + 8 dB(A)

The Principal may undertake noise monitoring or engage a third party to undertake noise monitoring of the Contractor's activities. Where the monitoring indicates that the Contractor's activities generated noise exceeding the limits identified in the table above, then the cost incurred by the Principal in undertaking the monitoring or engaging a third party to undertake the monitoring shall be a debt due and owing to the Principal by the Contractor.

Contractors should ensure that stationary engines, trucks and other machines are operated in a manner that will not cause noise nuisance or complaints to arise.

Vehicle exhaust brakes should not be used in the vicinity of the terminal.

3.20.13 Oils and greases

Servicing equipment and machines at the sugar terminals is prohibited unless prior approval is given by The Superintendent. No vehicle servicing is permitted unless in designated service bays. Grease and oil residues must be wiped from fillers or grease nipples. All wastes generated by the Contractor during these procedures shall be removed from the Site.

Washing vehicles and equipment is prohibited unless prior approval is given by Terminal Management. No vehicle washing is permitted unless in designated washdown bays.

Spill trays may be placed under parked vehicles however it is expected that prompt attention to repair or remove vehicles that leak fluids will be taken.

3.20.14 Digging

No activities which disturb the surrounds of septic tanks absorption trenches are permitted.

All proposed ground or structure penetrations are to be discussed with the Superintendent and checked for potential buried service interaction prior to undertaking any penetrations.

3.20.15 Contaminated soil and land

Any identified areas of contaminated land (including asbestos or acid sulphates) must remain undisturbed. No traffic or other activities which is likely to disturb the vegetation and soil capping or generate dusts is permitted in these areas.

3.20.16 Incidents and breaches

With the exception of incidents contemplated by clause 11A of the General Conditions, if an incident requires further investigation, and where the Contractor was responsible (either in part or completely), the Contactor and their employees or Sub-Contractors employees will attend any requested discussions and/or investigation at no cost to QSL. Contractors may also be asked to assist in discussions and/or investigations where they may not have been responsible but have knowledge about an incident.

3.20.17 Hot works

The Contractor shall implement a hot work permit system that aligns with QSL's hot work permit requirements. No hot works shall be undertaken without a valid permit. The Contractor shall supply at minimum a 9kg (or larger) dry chemical powder fire extinguisher AND a 9kg (or larger) water fire extinguisher within 4m of the hot work. Particular care must be taken toward protecting the conveyor belt

Docusign Envelope ID: EFC52467-A2A0-4DE2-91D5-216F30602930

3.20.18 Smoking

Smoking and vaping are not permitted.

3.20.19 Personal cleanliness

All persons attending the Lucinda terminal are to maintain a reasonable level of hygiene, no torn or excessively worn clothing or footwear is to be used.

Docusign Envelope ID: EFC52467-A2A0-4DE2-91D5-216F30602930

GENERAL NOTES PROTECTIVE COATING

1. TYPICAL PILEBENT SHOWN, PROTECTIVE COATING TREATMENT SAME ON OTHER BENT TYPES
2. SEE ORIGINAL CONSTRUCTION DRAWINGS FOR FURTHER DETAILS OF OTHER PILEBENT TYPES
3. PAINT COATING SYSTEM TO INCLUDE EXTENT OF HEADSTOCK PLUS 100mm BELOW TOP OF DENSO JACKET AS SHOWN HERE. DENSO SYSTEM TO EXTEND TO NO HIGHER THAN 1.9m ABOVE LOWEST ASTRONOMICAL TIDE
4. DETAILS OF PAINT COATING SYSTEM AND PREPARATION AS PER CONTRACT SPECIFICATION AND DULUX SPEC. PCQ-015-0121-4. FOLLOWING NOTES PROVIDE SUMMARY BUT SPECIFICATION TAKES PRECEDENCE:
   - DEGREASE ALL SURFACES. NOTE THERE MAY BE GREASE BENEATH THE BEARING PAD BETWEEN THE HEADSTOCK AND ROADWAY THAT MUST BE PREVENTED FROM CONTAMINATING WORKS
   - ABRASIVE BLAST CLEAN AS1627.4 TO CLASS Sa 2.5 TO VISUAL STANDARD ISO8501-1
   - SEE SPECIFICATION FOR QA SYSTEM REQUIREMENTS AND HOLD POINTS
   - DEEP PITTED AREAS TO BE GROUND SMOOTH WHERE POSSIBLE OR WELD FILLED AND GROUND SMOOTH PER PRINCIPAL'S DIRECTION
   - MASK CONVEYOR SLIDING SURFACE AND EXISITNG DENSO JACKETS.
   - DO NOT APPLY COATING IF RELATIVE HUMIDITY IS GREATER THAN THAN 85% OR STEEL SURFACE IS WITHIN 3 C OF THE DEW POINT
   - SURFACE SALT MUST BE BELOW 10 MICROGRAMS/CM2
   - APPLY INIITAL COATING WITHIN 4 HOURS OF BLAST CLEANING AND BEFORE DETERIORATION OCCURS. ALL SURFACES TO BE CLEAN AND DRY BEFORE COATING
   - STRIPE COAT AND BRUSH IN ALL EDGES, CORNERS, CORRODED AREAS AND DIFFICULT TO COAT AREAS BOTH COATS
   - 1ST COAT: 500µm DFT DUREMAX GFX
   - 2ND COAT: 500µm DFT DUREMAX GFX
   - MINIMUM RECOAT TIME 14 HOURS, MAXIMUM 14 DAYS
   - INIITAL COATING TO BE WASHED DOWN AND THROUGHLY DRIED PRIOR TO SUBSEQUENT COATING
   - CONTRASTING COLOURS TO BE USED. FINISH COLOUR MID-GRAY
   - FULL ENCAPSULATION AND COLLECTION OF BLAST MEDIA REQUIRED
5. APPLICATION OF DENSO SEASHIELD 2000FD IN ACCORDANCE WITH SPECIFICATION
6. REMOVE AND COLLECT LOOSE PAINT ON PILES PRIOR TO WATER BLASTING TO PREVENT LOSS OF PAINT TO WATER
7. WHERE REPAIR PLATES ARE INSTALLED ON PILES, ENSURE EDGES OR REPAIR PLATES HAVE DENSO MASTIC APPLIED EXTENDING MINIMUM 100MM FROM EDGE OF PLATE TO SMOOTH OUT PROFILE AND PREVENT GAPS. MASTIC TO BE APPLIED PRIOR TO MARINE PILING TAPE

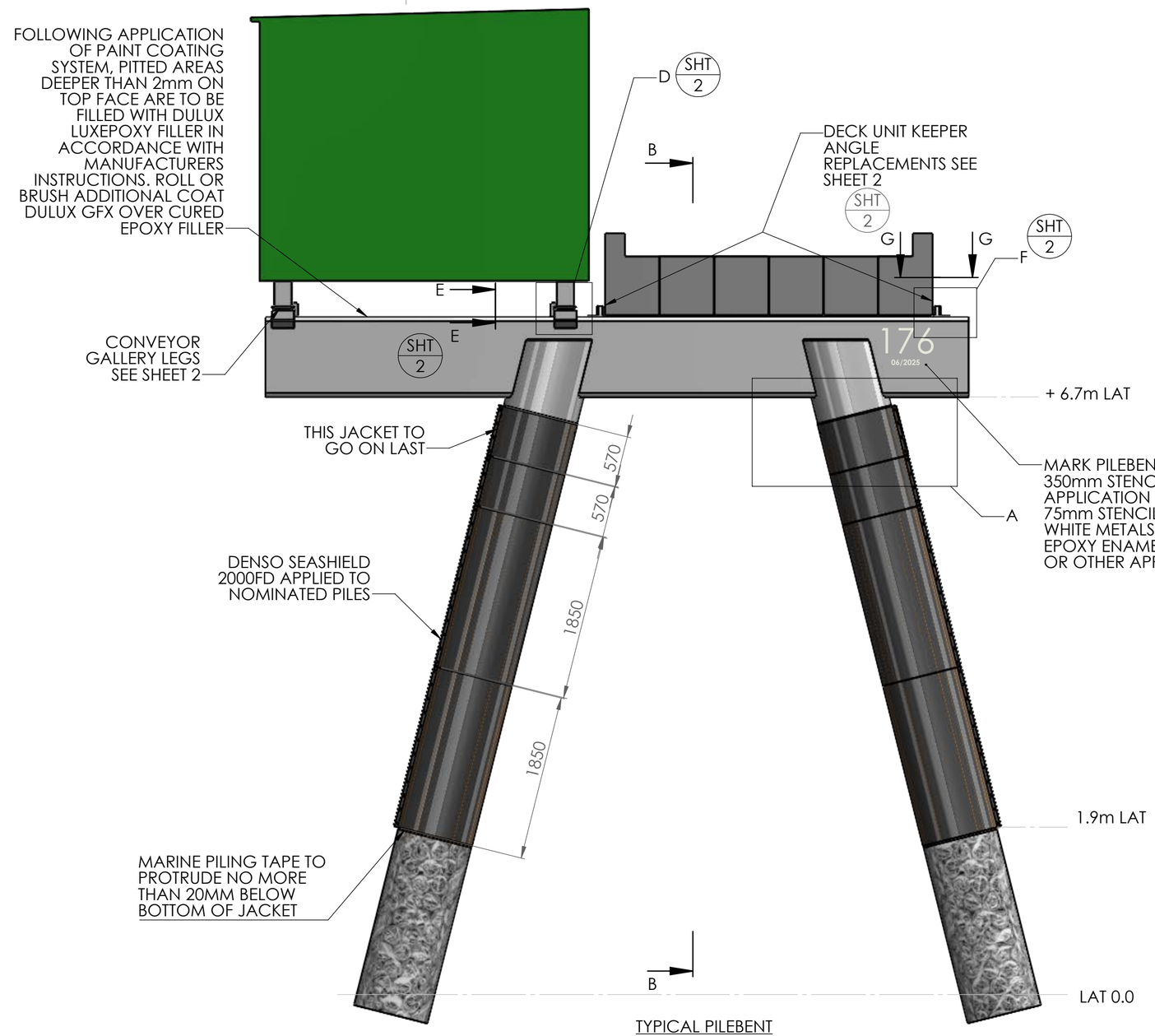

TYPICAL PILEBENT

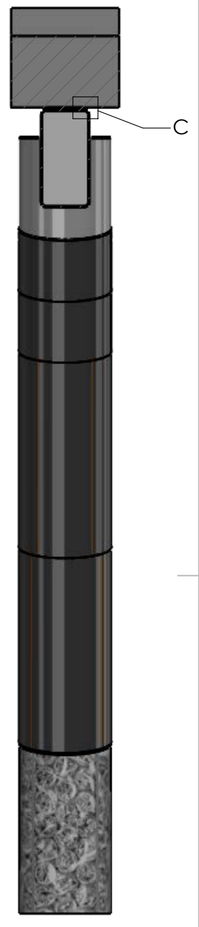

SECTION B-B

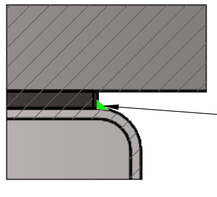

DETAIL C
SEALING AT BEARING PAD
SCALE 1 : 5

STRIPE COAT AT INTERFACE OF RUBBER BEARING PAD AND STEEL, PUSHING UNDER CREVICE. FOLLOWING APPLICATION OF COATING SYSTEM, APPLY SELLEYS PRO-SERIES POLYURETHANE SEALANT TO BASE OF BEARING PAD AND PUSH INTO CREVICE. DO NOT APPLY TO TOP EDGE OF BEARING PAD

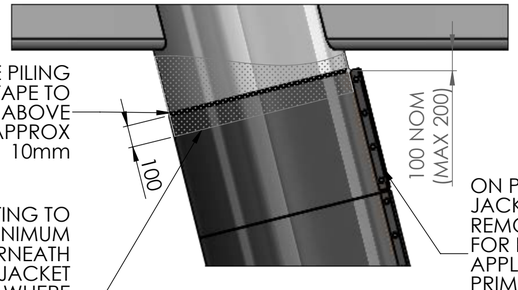

DETAIL A
TOP OF DENSO SEASHIELD SYSTEM
SCALE 1 : 20

STL
QSL OPERATIONS

DRAWN DE	DATE 16/11/2024	REVISION	0
LBST JETTY PILE AND HEADSTOCK REMEDIATION			
TITLE: **PILEBENT REQUIREMENTS SHEET 1**			
DWG NO. QSL2501-JPHR-G01-R0			A2
SCALE:1:40		SHEET 1 OF 2	

Docusign Envelope ID: EFC52467-A2A0-4DE2-91D5-216F30602930

TREATMENT AT GALLERY LEGS

1. REMOVE EXISITNG DENSO TAPE TO MINIMUM 200mm ABOVE FOOT
2. WATER BLAST AND REMOVE ALL CORROSION AROUND SLIDING FOOT
3. ENSURE GAP BETWEEN HOOK AND SLIDING GALLERY FOOT
4. MASK SLIDING SURFACE AND SLIDING FOOT
5. APPLY PAINT COATING SYSTEM TO 150mm ABOVE FOOT
6. REMOVE MASKING AND APPLY THICK LAYER OF DENSO PRIMER TO SLIDING SURFACE AND OTHER SURFACES
7. APPLY 2 LAYERS OF DENSO TAPE TO LEG/FOOT AND HOOK STARTING FROM 400mm ABOVE FOOT DOWN TO BASE OF FOOT. APPLY THICK LAYER OF DENSO PRIMER OVER TAPE SYSTEM.

NOTE: DENSO TAPE TO BE NEATLY APPLIED BY CUTTING CORNERS ETC TO ALLOW TAPE TO CONFORM AROUND EDGES. TO BE COMPLETED TO SATISFACTION OF PRINCIPAL'S REPRESENTATIVE

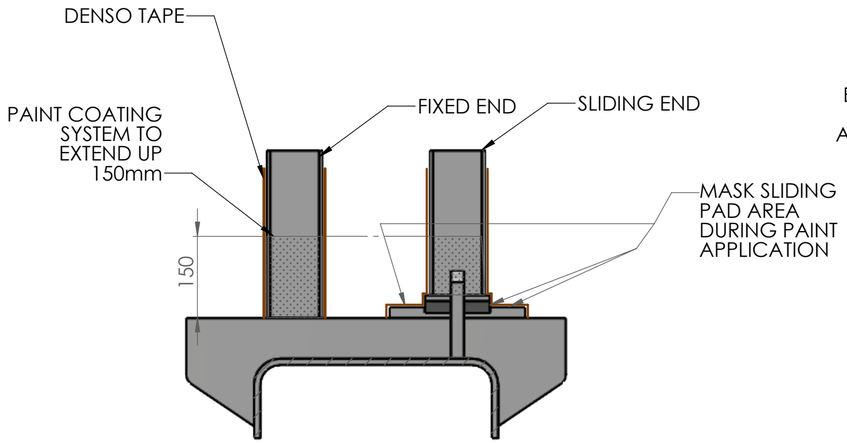

SECTION E-E SHEET 1
SCALE 1 : 8

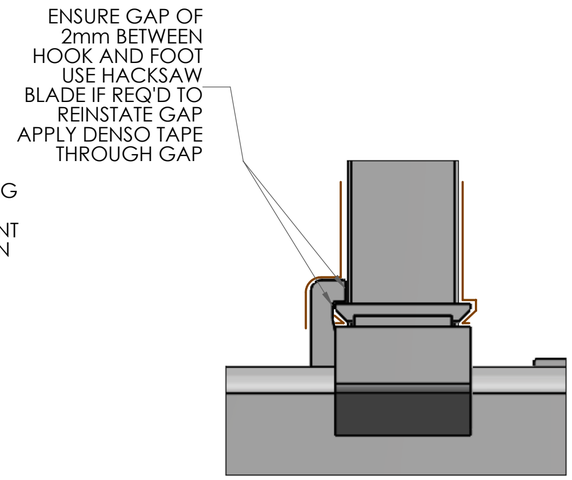

DETAIL D SHEET 1
SCALE 1 : 8

CONVEYOR GALLERY LEGS

DECK UNIT KEEPER ANGLE REPLACEMENT

1. REMOVE EXISTING ANGLES BY CUTTING/GRINDING, TAKING CARE NOT TO DAMAGE HEADSTOCK OR CONCRETE ROADWAY
2. WELD NEW ANGLE IN PLACE WITH 75mm GAP TO ROADWAY CONCRETE FACE
3. ABRASIVE BLAST NEW ANGLES TOGETHER WITH REMAINDER OF HEADSTOCK AND APPLY COATING SYSTEM AS PER SPECIFICATION
4. APPLY SIKAFLEX TO BEARING PAD EDGE
5. ADHERE ELASTOMERIC PAD TO ROADWAY
6. FORM AND POUR EPOXY GROUT IN ACCORDANCE WITH MANUFACTURERS REQUIREMENTS

WELDING NOTES:

- BOILERMAKER TO BE SUITABLY QUALIFIED AND EXPERIENCED WITH EVIDENCE OF QUALIFICATION SUBMITTED.
- WELDING TO BE CATEGORY SP TO AS1554 USING E48XX OR W50XX CONSUMABLES
- FINISH PROFILE OF WELDING TO BE SMOOTH AND FREE OF SHARP EDGES OR CREVICES. ALL WELD SPATTER POROSITY AND IRREGULAR WELD TO BE REMOVED AND REPLACED. WELDS TO BE GROUND SMOOTH. UNDERCUTING NOT PERMITTED. 100% VISUAL INSPECTION

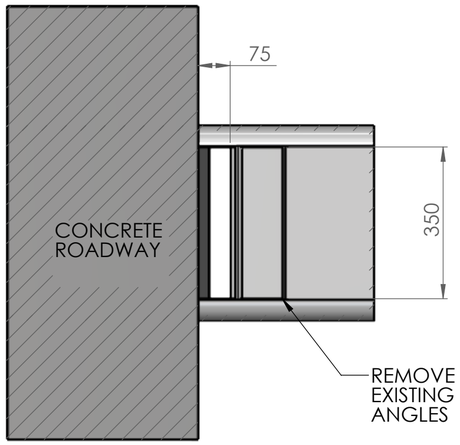

SECTION G-G SHEET 1
SCALE 1 : 10

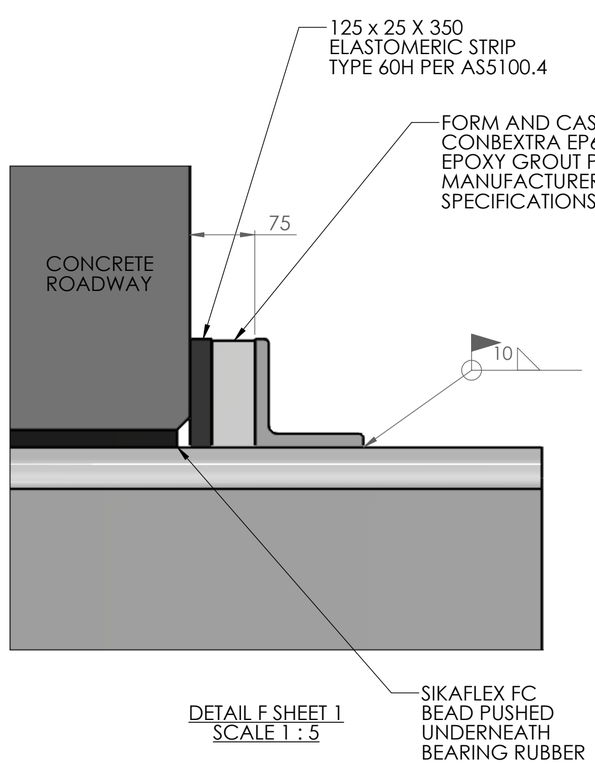

DETAIL F SHEET 1
SCALE 1 : 5

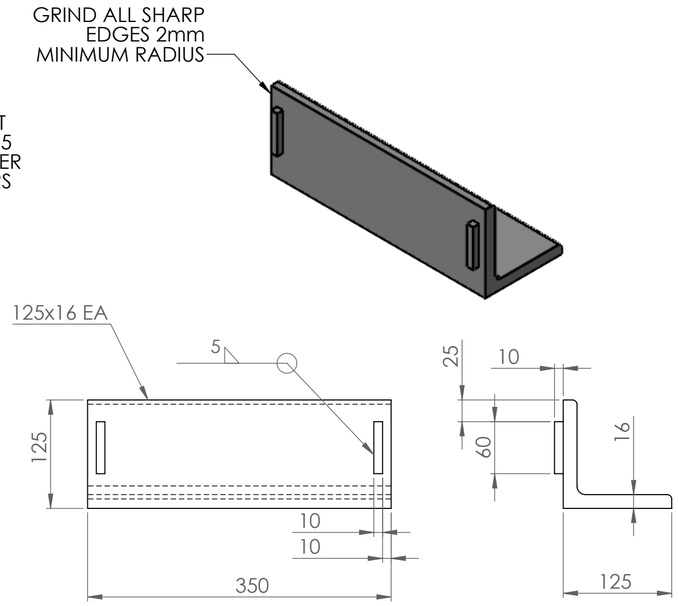

DECK UNIT KEEPER ANGLE FABRICATION

DECK UNIT KEEPER ANGLE REPLACEMENT

STL
QSL OPERATIONS

DRAWN DE	DATE 16/11/2024	REVISION	0
LBST JETTY PILE AND HEADSTOCK REMEDIATION			
TITLE: **PILEBENT REQUIREMENTS SHEET 2**			
DWG NO. QSL2501-JPHR-G02-R0			A2
SCALE:1:50		SHEET 2 OF 2	

Docusign Envelope ID: EFC52467-A2A0-4DE2-91D5-216F30602930

APPENDIX B – UNDERPASS REMEDIATION

QSL2501-JPHR-G03 – Underpass Requirements

Docusign Envelope ID: EFC52467-A2A0-4DE2-91D5-216F30602930

UNDERPASS TREATMENT GENERAL

1. REMOVE WALKWAY MESH COMPONENTS, PLACING BOLTS OR STUDS IN THE ATTACHMENT POINTS TO MAINTAIN THEM DURING SUSEQUENT STEPS.
2. REMOVE ALL EXISTING DENSO TAPE
3. CLEAN AND INSPECT FOR SEVERE CORROSION, HOLES ETC. SEEK ADVICE FROM SUPERINTENDENT'S REPRESENTATIVE
4. PAINT PROTECTIVE COATING SYSTEM IN ACCORDANCE WITH DULUX SPECIFICATION PCQ-015-0121-4 AND ANY REQUIREMENTS NOTED IN THE CONTRACT SPECIFICATION
5. CLEAN, ABRASIVE BLAST AND APPLY THE PAINT COATING SYSTEM CONSISTING OF 2 COATS OF 500um DFT DUREMAX GFX TO ALL SURFACES INCLUDING HANDRAILS AND LADDER RUNGS
6. TOPCOAT HANDRAILS AND LADDER RUNGS WITH 125um DFT DULUX WEATHERMAX HBR COLOUR Y14 GOLDEN YELLOW IN ACCORDANCE WITH MANUFACTURERS TECHNICAL DATA SHEETS
7. HOLLOW SECTION MEMBERS FORMING THE FLOOR FRAME AND HANGERS FOR THE UNDERPASS AND UPPER LEVEL PLATFORMS ARE TO BE ADDITIONALLY TREATED WITH THE DENSO SEASHIELD 70 SYSTEM FOLLOWING APPLICATION OF THE PAINT COATING SYSTEM:
   - MINIMUM 20mm DENSO MASTIC TO BE APPLIED AT ALL INTERNAL CORNERS TO BUILD RADIUS
   - APPLY A LAYER OF DENSO SEASHIELD PRIMER
   - APPLY MINIMUM 2 LAYERS OF DENSO MARINE PILING TAPE, CUTTING AS REQUIRED TO NEATLY COVER CORNERSAND EDGES
   - APPLY DENSO GLASS OUTERWRAP UV IN A MINIMUM 55% OVERLAP, ENSURING ALL AIR POCKETS ARE ELIMINATED AND TAPE IS FORMED NEATLY AT EDGES AND CORNERS, WITH NO UPTURNED TAPE EDGES.
   - APPLY TEMPORARY POLYWRAP AND REATTACH WALKWAY MESH TEMPORARILY PRIOR TO GLASS OUTERWRAP CURING SO OUTERWRAP CONFORMS TO MESH DURING CURING.

GENERAL NOTES

8. WUC INCLUDE THE UNDERPASS, THE UPPER LEVEL ACCESS PLATFORM ATTACHED TO THE ROADWAY, BOTH LADDERS, ALL HANDRAILS, AND THE ACCESS PLATFORM ON THE CONVEYOR SIDE EXTENDING UNDERNEATH THE CLADDING WHERE POSSIBLE.
9. FOR THE FIRST UNDERPASS OF EACH TYPE (ORIGINAL AND NEW VARIETIES), A TRIAL WRAPPING SECTION MUST BE UNDERTAKEN TO DETERMINE THE OPTIMUM ARRANGMENT AND ORIENTATION OF TAPE AND OUTERWRAP. THIS SHALL BE COMPLETED TO THE SATISFACTION OF THE SUPERINTENDENT'S REPRESENTATIVE PRIOR TO COMPLETING THE REMAINDER OF THE UNDERPASS. THE AGREED METHOD MUST BE USED ON ALL OTHER UNDERPASSES.
10. REMOVING SECTIONS FOR TREATMENT IN THE WORKSHOP IS PERMISSIBLE.

UPPER LEVEL PLATFORMS INCLUDED

NO TREATMENT REQUIRED ON STAINLESS LADDER CAGES

SEASHIELD 70 SYSTEM TO INCLUDE HANGERS UP TO HEADSTOCK

NEW STYLE UNDERPASS

SEASHIELD 70 SYSTEM TO INCLUDE HANGERS UP TO HEADSTOCK

ORIGINAL UNDERPASS

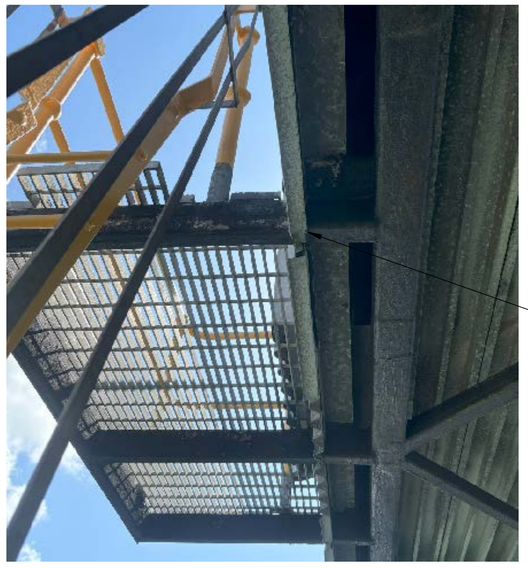

SEASHIELD 70 SYSTEM TO EXTEND SLIGHTLY UNDER SHEETING WHERE POSSIBLE

UPPER LEVEL PLATFORM ON CONVEYOR SIDE

STL

QSL OPERATIONS

DRAWN DE	DATE 16/11/2024	REVISION 0	
LBST JETTY PILE AND HEADSTOCK REMEDIATION			
TITLE: **UNDERPASS REQUIREMENTS**			
DWG NO. QSL25-1-JPHR-G03-R0			A2
SCALE:1:1		SHEET 1 OF 1	

Docusign Envelope ID: EFC52467-A2A0-4DE2-91D5-216F30602930

APPENDIX C C7B INTERNAL GALLERY WRAPPING REQUIREMENTS

QSL2501-JPHR-G04 – Conveyor Gallery Wrapping Requirements

Docusign Envelope ID: EFC52467-A2A0-4DE2-91D5-216F30602930

INTERNAL GALLERY WRAPPING GENERAL NOTES

1. THE CONVEYOR BELT MUST BE LOCKED OUT DURING WORKS AND ALL WORKERS MUST USE A PERSONAL LOCK IN ACCORDANCE WITH THE QSL LOCK-OUT/TAG-OUT PROCEDURE
2. PROTECTION OF THE CONVEYOR BELT IS OF UTMOST IMPORTANCE. A DROP SHEET MUST BE PLACED ON THE BELT WHERE ANY WORK IS OCCURRING ON THE TOP SECTION. THIS DROP SHEET MUST BE REMOVED AT THE COMPLETION OF EACH DAY'S WORK, THE BELT CLEANED AND ANY TOOLS REMOVED FROM ABOVE THE BELT
3. THE AREA TO BE TREATED MUST BE WATER BLASTED ANY ANY LOOSE PAINT AND CORROSION REMOVED. THE CONTRACTOR MUST INSPECT THE AREA FOR SEVERE CORROSION OR HOLING PRIOR TO PROCEEDING. CONCERNS SHOULD BE RAISED WITH THE SUPERINTENDENT'S REPRESENTATIVE FOR FURTHER DIRECTION
4. AN INITIAL SECTION FOR EACH REGION SHALL BE UNDERTAKEN IN ORDER TO CONFIRM THE METHODOLOGY AND WRAPPING SEQUENCE. THE SECTION SHALL BE COMPLETED TO THE SATISFACTION OF THE SUPERINTENDENT'S REPRESENTATIVE AND FURTHER AREAS SHALL BE CONSTRUCTED TO THE SAME STANDARD
5. THE WRAPPING SHALL BE OF A SIMILAR STANDARD TO THE EXISITNG GOOD AND NEAT EXAMPLES. A CIGARETTE PAPER STYLE WRAP SHOULD GENERALLY BE USED ON THE TOP CHORD AND SIDE SECTIONS WITH JOINS ON THE TOP OR SIDE OF THE BEAM AND WEATHERBOARDING OF JOINS. ALL AIR POCKETS TO BE REMOVED BY PRESSING TAPE TO SURFACE AND SMOOTHING BY HAND. TERMINATED SECTION SHALL HAVE ONE CIRCUMFERENTIAL WRAP
6. ALL OVERLAPS MUST BE A MINIMUM OF 25mm
7. WRAPPING OF NODES SHALL BE CONSTRUCTED NEATLY BY CUTTING OF TAPE AS REQUIRED TO ENSURE A NEAT FINISH
8. TREATMENT SHALL EXTEND ONTO BOLTED PLATES

TOP SECTION

9. THE TOP SECTION IS NOMINALLY INCLUSIVE OF THE AREA 250mm FROM EACH CHORD AND MUST OVERLAP THE TOP CHORD SECTIONS ALREADY COMPLETED
10. THE TOP SECTION SHALL USE THE FOLLOWING SYSTEM:
    - DENSO PRIMER PLACED ON ANY CORRODED AREA PLUS BOLT HEADS
    - A VERY THIN LAYER OF DENSO PRIMER APPLIED TO REMAINING SURFACES
    - DENSYL KF COLOURTAPE SPIRALLY APPLIED WITH MINIMUM 55% OVERLAP
11. THE CABLE TRAY AND FIRE ALARM PLATES SHALL BE LOOSENED WHERE POSSIBLE AND TAPE PUSHED UNDERNEATH
12. TAPE SHALL BE NEATLY FORMED AROUND THE CONDUIT BRACKETS WITH CUT SECTIONS TO FORM CLOSE SEAL. ALTERNATIVELY THESE MAY BE LOOSED WITH TAPE PUSHED UNDERNEATH.

CHORD SECTION

13. THE TOP CHORD SECTION IS INCLUSIVE OF THE AREA 300mm FROM EACH CHORD
14. THE TOP CHORD SECTION SHALL USE THE FOLLOWING SYSTEM:
    - DENSO PRIMER PLACED OVER ALL SURFACES
    - A SINGLE LAYER OF DENSYL TAPE WITH MINIMUM 25mm OVERLAPS

SIDE SECTION

15. THE SIDE SECTION IS INCLUSIVE OF THE AREA 100mm FROM THE BOTTOM CHORD AND 250MM FROM TOP CHORD IT MUST OVERLAP SECTIONS ALREADY COMPLETED
16. THE SIDE SECTION SHALL USE THE FOLLOWING SYSTEM:
    - DENSO PRIMER PLACED OVER ALL SURFACES
    - A NOMINAL SINGLE LAYER OF DENSYL TAPE WITH MINIMUM 25mm OVERLAPS
    - A TOPCOAT OF DENSO SINGLE PACK ELASTOMERIC MEMBRANE APPLIED BY BRUSH OR ROLLER IN A SINGLE THICK COAT OR A SPIRALLY APPLIED LAYER OF DENSO PVC OUTERWRAP WITH 55% OVERLAP

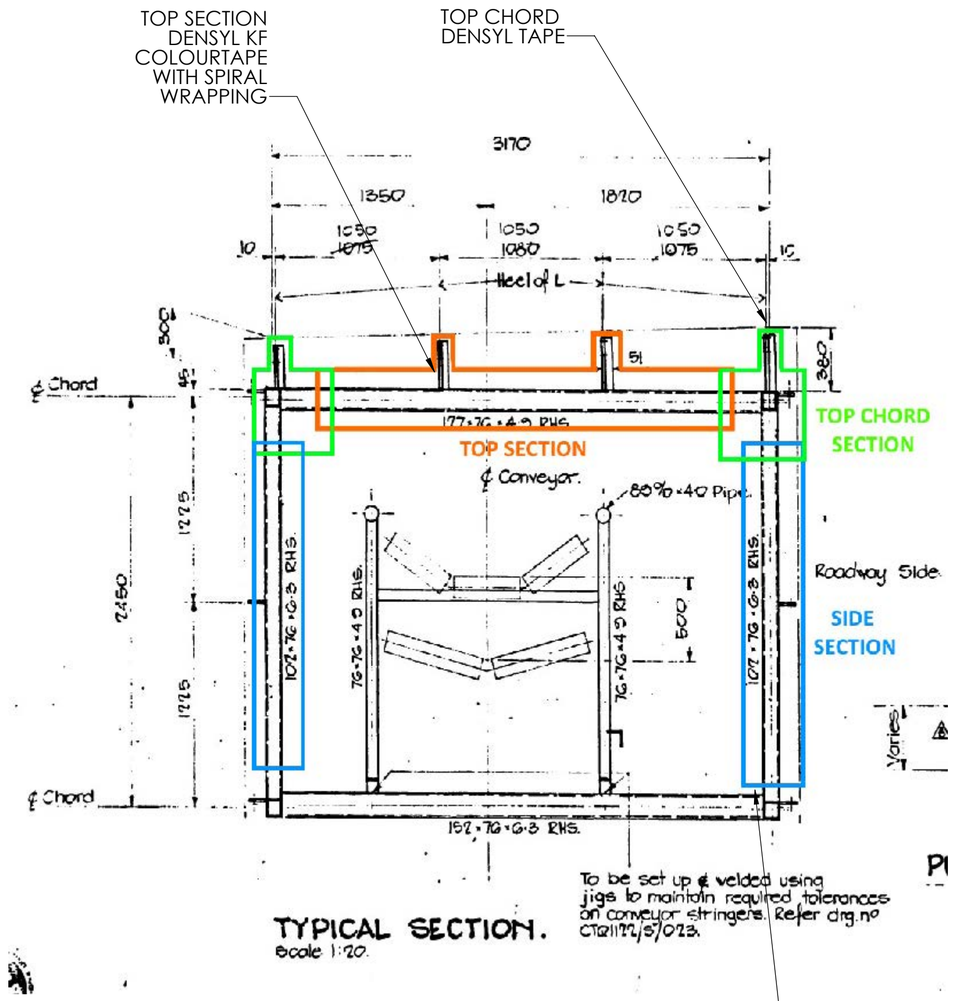

WORK SECTIONS
REFER DWG CTQ1122-S-018 FOR LAYOUT OF MEMBERS

SIDE SECTION DENSYL TAPE WITH DENSO ELASTOMERIC MEMBRANE TOPCOAT OR PVC OUTERWRAP

TYPICAL VIEW INSIDE GALLERY WITH TOP CHORD SECTIONS COMPLETED

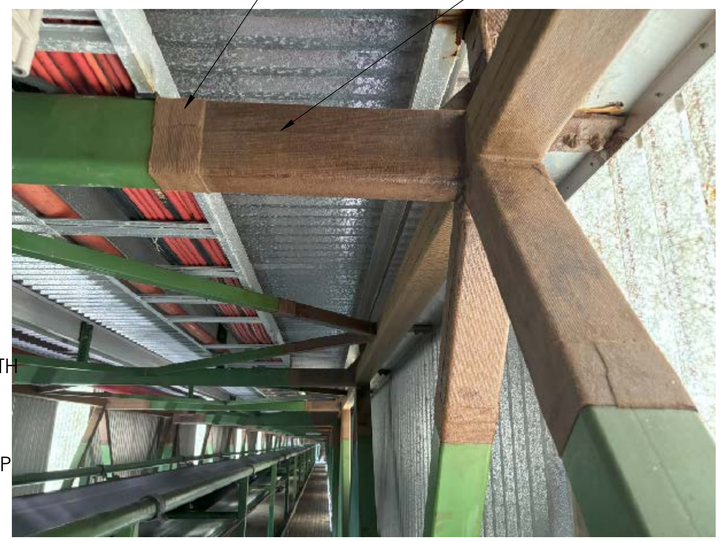

EXAMPLE OF NEAT WORKMANSHIP AT NODE

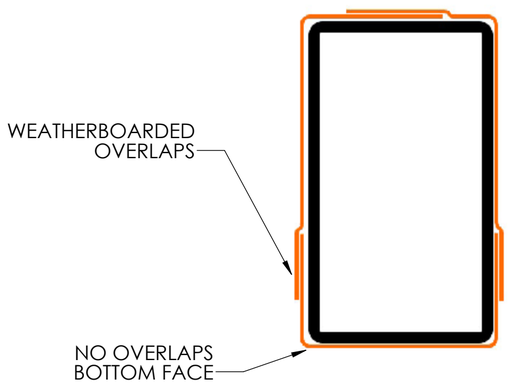

TYPICAL CIGARETTE STYLE WRAP OF HOLLOW SECTIONS FOR SIDE AND TOP CHORD SECTIONS

STL
QSL OPERATIONS

DRAWN DE	DATE 16/11/2024	REVISION	0
LBST JETTY PILE AND HEADSTOCK REMEDIATION			
TITLE: CONVEYOR GALLERY WRAPPING REQUIREMENTS			
DWG NO. QSL2501-JPHR-G04-R0			A2
SCALE:1:1		SHEET 1 OF 1	

Docusign Envelope ID: EFC52467-A2A0-4DE2-91D5-216F30602930

APPENDIX D JETTY PILEBENT SCOPE LISTING

APPENDIX D – JettyPilebentScopeofWorks.xlsx

Docusign Envelope ID: EFC52467-A2A0-4DE2-91D5-216F30602930

SOUTHERN END OF HEADSTOCK -> NORTHERN END OF HEADSTOCKS

Pilebent no.	Included in Contract	Pilebent type	Stopaq bands to remov	Full piles to include	top jacket only to inclu	Expansion Joint	Headstock Condition (2	Underpass and type	painted history	Pile no.	Pile works	Pile no.	Pile works	Pile no.	Pile works	Pile no.	Pile works	Pile no.	Pile works	Pile no.	Pile works	Pile no.	Pile works	1 Inclusion in Separable Portion (1 to 7)
1	N						5			1-5		1-4		1-3		1-2				1-1					
2	N						4			2-4		2-3		2-2						2-1					
3	Y	Typical					4							3-2						3-1				SP7	
4	Y	Typical					5							4-2						4-1				SP7	
5	Y	Typical					4							5-2						5-1				SP7	
6	Y	Typical					4							6-2						6-1				SP7	
7	P	Expansion joint				EJ	5							7-2		7-3				7-1				SP7	
8	Y	Typical					4							8-2						8-1				SP7	
9	Y	Typical					5							9-2						9-1				SP7	
10	Y	Typical					5							10-2						10-1				SP7	
11	Y	Typical					4							11-2						11-1				SP7	
12	Y	Typical					5							12-2						12-1				SP7	
13	Y	Anchor Bent Type A					5							13-2		13-3				13-1				SP7	
14	Y	Typical					5							14-2						14-1				SP7	
15	Y	Typical					4							15-2						15-1				SP7	
16	Y	Typical					5							16-2						16-1				SP7	
17	Y	Typical					4	OLD						17-2						17-1				SP7	
18	Y	Typical					5							18-2						18-1				SP7	
19	P	Expansion joint				EJ	2							19-2		19-3				19-1				SP7	
20	Y	Typical					5							20-2						20-1				SP7	
21	Y	Typical					5							21-2						21-1				SP7	
22	Y	Typical					4							22-2						22-1				SP7	
23	Y	Typical					4							23-2						23-1				SP7	
24	Y	Passing Bay	1				4			24-3				24-2						24-1				SP7	
25	Y	Anchor Bent Type A Passing Bay					4			25-4				25-2		25-3				25-1				SP7	
26	Y	Typical	1				4							26-2						26-1				SP7	
27	Y	Typical					4							27-2						27-1				SP7	
28	Y	Typical					5							28-2						28-1				SP7	
29	Y	Typical					4							29-2						29-1				SP7	
30	Y	Typical					5							30-2						30-1				SP7	
31	P	Expansion joint				EJ	4							31-2		31-3				31-1				SP7	
32	Y	Typical					4	OLD						32-2						32-1				SP7	
33	Y	Typical					4							33-2						33-1				SP7	
34	Y	Typical					4		painted 2010					34-2						34-1				SP7	
35	Y	Typical					4		painted 2010					35-2						35-1				SP7	
36	Y	Typical					4		painted 2010					36-2						36-1				SP7	
37	Y	Anchor Bent Type A	1				4							37-2		37-3				37-1				SP7	
38	Y	Typical	1				4							38-2						38-1				SP7	
39	Y	Typical					4							39-2						39-1				SP7	
40	Y	Typical					5		painted 2010					40-2						40-1				SP7	
41	Y	Typical					5		painted 2010					41-2						41-1				SP7	
42	Y	Typical	1				4							42-2						42-1				SP7	
43	P	Expansion joint				EJ	2							43-2		43-3				43-1				SP7	
44	Y	Typical					4							44-2						44-1				SP7	
45	Y	Typical					4							45-2						45-1				SP7	
46	Y	Typical					4							46-2						46-1				SP7	
47	Y	Typical					4	OLD						47-2						47-1				SP7	
48	Y	Typical					5		painted 2010					48-2						48-1				SP7	
49	N						5							49-2		49-3				49-1					
50	Y	Typical					4							50-2						50-1				SP7	
51	Y	Typical					4							51-2						51-1				SP7	
52	Y	Typical	1				4							52-2						52-1				SP7	
53	Y	Typical					4							53-2						53-1				SP7	
54	Y	Typical					5		painted 2010					54-2						54-1				SP7	
55	P	Expansion joint				EJ	4							55-2		55-3				55-1				SP6	

Docusign Envelope ID: EFC52467-A2A0-4DE2-91D5-216F30602930

SOUTHERN END OF HEADSTOCK -> NORTHERN END OF HEADSTOCKS

Pilebent no.	Included in Contract	Pilebent type	Stopaq bands to remov	Full piles to include	top jacket only to inclu	Expansion Joint	Headstock Condition (2	Underpass and type	painted history	Pile no.	Pile works	Pile no.	Pile works	Pile no.	Pile works	Pile no.	Pile works	Pile no.	Pile works	Pile no.	Pile works	Pile no.	Pile works	Inclusion in Separable Portion (1 to 7)
56	Y	Typical					4							56-2						56-1					SP7
57	Y	Typical	1				4							57-2						57-1					SP7
58	Y	Typical					4							58-2						58-1					SP7
59	Y	Typical					5		painted 2010					59-2						59-1					SP7
60	N						5			60-3				60-2						60-1					
61	N						5			61-4				61-2		61-3				61-1					
62	Y	Typical					4	OLD						62-2						62-1					SP6
63	Y	Typical					5		painted 2010					63-2						63-1					SP6
64	Y	Typical					5		painted 2010					64-2						64-1					SP6
65	Y	Typical					5							65-2						65-1					SP6
66	Y	Typical					5							66-2						66-1					SP6
67	P	Expansion joint				EJ	5							67-2		67-3				67-1					SP6
68	Y	Typical					5		painted 2010					68-2						68-1					SP6
69	Y	Typical					5							69-2						69-1					SP6
70	Y	Typical					5							70-2						70-1					SP6
71	Y	Typical					5							71-2						71-1					SP6
72	Y	Typical					5							72-2						72-1					SP6
73	Y	Anchor Bent Type A					5							73-2		73-3				73-1					SP6
74	Y	Typical					5							74-2						74-1					SP6
75	Y	Typical					5							75-2						75-1					SP6
76	Y	Typical					5							76-2						76-1					SP6
77	Y	Typical					5	OLD						77-2						77-1					SP6
78	Y	Typical					4							78-2						78-1					SP6
79	P	Expansion joint				EJ	5							79-2		79-3				79-1					SP6
80	Y	Typical	1				5							80-2						80-1					SP6
81	Y	Typical					5							81-2						81-1					SP6
82	Y	Typical					4							82-2						82-1					SP6
83	Y	Typical					5							83-2						83-1					SP6
84	Y	Typical					5		painted 2010					84-2						84-1					SP6
85	Y	Anchor Bent Type A					4							85-2		85-3				85-1					SP6
86	Y	Typical					4							86-2						86-1					SP6
87	Y	Typical					5							87-2						87-1					SP6
88	Y	Typical					5							88-2						88-1					SP6
89	Y	Typical					5							89-2						89-1					SP5
90	Y	Typical					4							90-2						90-1					SP5
91	P	Expansion joint				EJ	4							91-2		91-3				91-1					SP5
92	Y	Typical					4	OLD						92-2						92-1					SP5
93	Y	Typical					5							93-2						93-1					SP5
94	Y	Typical					5		painted 2010					94-2						94-1					SP5
95	Y	Typical					5							95-2						95-1					SP5
96	Y	Typical					4							96-2						96-1					SP5
97	Y	Anchor Bent Type A	1				4							97-2		97-3				97-1					SP5
98	Y	Typical	1				5							98-2						98-1					SP5
99	Y	Typical					5							99-2						99-1					SP5
100	Y	Typical					5							100-2						100-1					SP5
101	Y	Typical					5							101-2						101-1					SP5
102	Y	Typical					5							102-2						102-1					SP5
103	P	Expansion joint				EJ	5							103-2		103-3				103-1					SP5
104	Y	Typical					4							104-2						104-1					SP5
105	Y	Typical					5							105-2						105-1					SP5
106	Y	Typical					5							106-2						106-1					SP5
107	Y	Typical					5	OLD						107-2						107-1					SP5
108	Y	Passing Bay	1				4			108-3				108-2						108-1					SP5
109	Y	Anchor Bent Type A Passing Bay	1				4			109-4				109-2		109-3				109-1					SP5
110	Y	Typical					4							110-2						110-1					SP5
111	Y	Typical	1				4							111-2						111-1					SP5
112	Y	Typical	1				5		painted 2010					112-2						112-1					SP5
113	Y	Typical					4							113-2						113-1					SP5
114	Y	Typical					4							114-2						114-1					SP5
115	P	Expansion joint				EJ	4							115-2		115-3				115-1					SP5

Docusign Envelope ID: EFC52467-A2A0-4DE2-91D5-216F30602930

SOUTHERN END OF HEADSTOCK -> NORTHERN END OF HEADSTOCKS

Pilebent no.	Included in Contract	Pilebent type	Stopaq bands to remov	Full piles to include	top jacket only to inclu	Expansion Joint	Headstock Condition (2	Underpass and type	painted history	Pile no.	Pile works	Pile no.	Pile works	Pile no.	Pile works	Pile no.	Pile works	Pile no.	Pile works	Pile no.	Pile works	Pile no.	Pile works	Pile no.	Pile works	Inclusion in Separable Portion (1 to 7)
116	Y	Typical					4							116-2						116-1						SP5
117	Y	Typical					4							117-2						117-1						SP5
118	Y	Typical					4							118-2						118-1						SP5
119	Y	Typical					4							119-2						119-1						SP5
120	Y	Typical	1				4							120-2						120-1						SP5
121	Y	Anchor Bent Type A					4							121-2		121-3				121-1						SP5
122	Y	Typical					5	OLD						122-2						122-1						SP5
123	Y	Typical					4							123-2						123-1						SP5
124	Y	Typical					4							124-2						124-1						SP5
125	Y	Typical					4							125-2						125-1						SP5
126	Y	Typical					4							126-2						126-1						SP5
127	P	Expansion joint	1			EJ	4							127-2		127-3				127-1						SP5
128	Y	Typical					4							128-2						128-1						SP5
129	Y	Typical					4							129-2						129-1						SP5
130	Y	Typical					4							130-2						130-1						SP5
131	Y	Typical					4							131-2						131-1						SP5
132	Y	Typical					4							132-2						132-1						SP5
133	N						5							133-2		133-3				133-1						
134	Y	Typical					4							134-2						134-1						SP5
135	Y	Typical					4							135-2						135-1						SP5
136	Y	Typical	2				5		painted 2010					136-2						136-1						SP5
137	Y	Typical					4	OLD						137-2						137-1						SP5
138	Y	Typical	1				5		painted 2010					138-2						138-1						SP5
139	N					EJ	5							139-2		139-3				139-1						
140	Y	Typical	1				4							140-2						140-1						SP5
141	Y	Typical	2				5		painted 2010					141-2						141-1						SP5
142	Y	Typical					4							142-2						142-1						SP5
143	Y	Typical	1				4							143-2						143-1						SP5
144	Y	Typical					5							144-2						144-1						SP5
145	Y	Anchor Bent Type A					4							145-2		145-3				145-1						SP5
146	Y	Typical	2				5		painted 2010					146-2						146-1						SP4
147	Y	Typical					4							147-2						147-1						SP4
148	Y	Typical					4							148-2						148-1						SP4
149	Y	Typical	1				5		painted 2010					149-2						149-1						SP4
150	Y	Typical	2				5		painted 2010					150-2						150-1						SP4
151	N																									
152	N																									
153	Y	Typical	2				3							153-2						153-1						SP4
154	Y	Typical	1				4							154-2						154-1						SP4
155	Y	Typical					3							155-2						155-1						SP4
156	Y	Passing Bay	1				3			156-3				156-2						156-1						SP4
157	Y	Anchor Bent Type A Passing Bay					3			157-4				157-2		157-3				157-1						SP4
158	Y	Typical					4							158-2						158-1						SP4
159	Y	Typical					5		painted 2010					159-2						159-1						SP4
160	Y	Typical	1				3							160-2						160-1						SP4
161	Y	Typical					3							161-2						161-1						SP4
162	Y	Typical					3							162-2						162-1						SP4
163	P	Expansion joint				EJ	3							163-2		163-3				163-1						SP4
164	Y	Typical					5		painted 2010					164-2						164-1						SP4
165	Y	Typical	1				3							165-2						165-1						SP4
166	Y	Typical					3							166-2						166-1						SP4
167	Y	Typical					4	NEW						167-2						167-1						SP4
168	Y	Anchor Bent Type B					3							168-2		168-3		168-4		168-1						SP4
169	Y	Typical					5		painted 2010					169-2						169-1						SP4
170	Y	Typical	1				4							170-2						170-1						SP4
171	Y	Typical					5		painted 2010					171-2						171-1						SP4
172	Y	Typical					5		painted 2010					172-2						172-1						SP3
173	P	Expansion joint	1			EJ	4							173-2		173-3				173-1						SP4
174	Y	Typical					5		painted 2010					174-2						174-1						SP3
175	Y	Typical					4							175-2						175-1						SP3

Docusign Envelope ID: EFC52467-A2A0-4DE2-91D5-216F30602930

SOUTHERN END OF HEADSTOCK -> NORTHERN END OF HEADSTOCKS

Pilebent no.	Included in Contract	Pilebent type	Stopaq bands to remov	Full piles to include	top jacket only to inclu	Expansion Joint	Headstock Condition (2	Underpass and type	painted history	Pile no.	Pile works	Pile no.	Pile works	Pile no.	Pile works	Pile no.	Pile works	Pile no.	Pile works	Pile no.	Pile works	Pile no.	Pile works	Pile no.	Pile works	Inclusion in Separable Portion (1 to 7)
176	Y	Typical					5		painted 2010					176-2				177-4		176-1						SP3
177	Y	Anchor Bent Type B	2				3							177-2		177-3				177-1						SP3
178	Y	Typical					4							178-2						178-1						SP3
179	Y	Typical	1				3							179-2						179-1						SP3
180	Y	Typical					3							180-2						180-1						SP3
181	P	Expansion joint				EJ	4							181-2		181-3				181-1						SP4
182	Y	Typical					3	NEW						182-2						182-1						SP3
183	Y	Typical					3							183-2						183-1						SP3
184	Y	Typical					3							184-2						184-1						SP3
185	N						5							185-2		185-3		185-4		185-1						
186	Y	Typical					3							186-2						186-1						SP3
187	Y	Typical					4							187-2						187-1						SP3
188	Y	Typical					4							188-2						188-1						SP3
189	N					EJ	5							189-2		189-3				189-1						
190	Y	Typical					3							190-2						190-1						SP3
191	Y	Typical					3							191-2						191-1						SP3
192	Y	Typical					3							192-2						192-1						SP3
193	Y	Anchor Bent Type B					3							193-2		193-3		193-4		193-1						SP3
194	Y	Typical					3	NEW						194-2						194-1						SP3
195	Y	Typical					3							195-2						195-1						SP3
196	Y	Typical	2				3							196-2						196-1						SP3
197	P	Expansion joint				EJ	3							197-2		197-3				197-1						SP3
198	Y	Typical					4							198-2						198-1						SP3
199	Y	Typical	1				3							199-2						199-1						SP3
200	Y	Passing Bay		2			3			200-3	FULL			200-2	FULL					200-1						SP3
201	Y	Anchor Bent Type B Passing Bay	1		1		3			201-5	TOP			201-2		201-3		201-4		201-1						SP3
202	Y	Typical		1			3							202-2						202-1	FULL					SP3
203	Y	Typical					3							203-2						203-1						SP3
204	Y	Typical		1			4							204-2						204-1	FULL					SP3
205	P	Expansion joint			2	EJ	3							205-2		205-3	TOP			205-1	TOP					SP3
206	Y	Typical		1			4							206-2						206-1	FULL					SP3
207	Y	Typical	1				4							207-2						207-1						SP3
208	Y	Typical		1			5							208-2						208-1	FULL					SP3
209	Y	Anchor Bent Type B		1	1		4							209-2	TOP	209-3		209-4		209-1	FULL					SP3
210	Y	Typical		1			4							210-2						210-1	FULL					SP3
211	Y	Typical		1			4							211-2						211-1	FULL					SP3
212	Y	Typical		1			4	NEW						212-2						212-1	FULL					SP3
213	P	Expansion joint		3		EJ	4							213-2	FULL	213-3	FULL			213-1	FULL					SP3
214	Y	Typical		1	1		4							214-2	TOP					214-1	FULL					SP3
215	Y	Typical	1		1		4							215-2	TOP					215-1						SP3
216	Y	Typical		1	1		4							216-2	TOP					216-1	FULL					SP3
217	Y	Anchor Bent Type B	2	1			4							217-2		217-3		217-4	FULL	217-1						SP3
218	Y	Typical	1	1			4							218-2						218-1	FULL					SP3

Docusign Envelope ID: EFC52467-A2A0-4DE2-91D5-216F30602930

										SOUTHERN END OF HEADSTOCK -> NORTHERN END OF HEADSTOCKS																	
Pilebent no.	Included in Contract	Pilebent type	Stopaq bands to remov	Full piles to include	top jacket only to inclu	Expansion Joint	Headstock Condition (2	Underpass and type	painted history	Pile no.	Pile works	Pile no.	Pile works	Pile no.	Pile works	Pile no.	Pile works	Pile no.	Pile works	Pile no.	Pile works	Pile no.	Pile works	Pile no.	Pile works	Inclusion in Separable Portion (1 to 7)
219	Y	Typical		1	1		4							219-2	TOP					219-1	FULL					SP3
220	Y	Typical					4		painted 2010					220-2						220-1						SP3
221	N					EJ	5							221-2		221-3				221-1						
222	Y	Typical					3		painted 2010					222-2						222-1						SP3
223	Y	Typical					4		painted 2010					223-2						223-1						SP3
224	Y	Typical					5		painted 2010					224-2						224-1						SP3
225	Y	Typical					4		painted 2010					225-2						225-1						SP3
226	N						5		Painted 2014					226-2		226-3		226-4		226-1						
227	Y	Typical		1			3	NEW						227-2						227-1	FULL					SP3
228	Y	Typical		1	1		4							228-2	TOP					228-1	FULL					SP3
229	Y	Typical	1		1		4							229-2	TOP					229-1						SP3
230	Y	Typical					5							230-2						230-1						SP3
231	P	Expansion joint		2	1	EJ	3							231-2	TOP	231-3	FULL			231-1	FULL					SP3
232	Y	Typical		1			4							232-2						232-1	FULL					SP3
233	Y	Typical					4							233-2						233-1						SP3
234	Y	Typical		1	1		4							234-2	TOP					234-1	FULL					SP3
235	Y	Typical	1	1			4							235-2	FULL					235-1						SP3
236	Y	Typical		2			4							236-2	FULL					236-1	FULL					SP3
237	N						5							237-2		237-3		237-4		237-1						
238	Y	Typical					4							238-2						238-1						SP3
239	Y	Typical					4							239-2						239-1						SP2
240	Y	Typical	1	1			4							240-2	FULL					240-1						SP2
241	N						5							241-2						241-1						
242	N						5	NEW						242-2						242-1						
243	N					EJ	5							243-2		243-3				243-1						
244	Y	Typical	1				4							244-2						244-1						SP2
245	Y	Typical					4							245-2						245-1						SP2
246	Y	Typical	2				4							246-2						246-1						SP2
247	N						5							247-2						247-1						
248	Y	Passing Bay		1			4			248-3				248-2						248-1	FULL					SP2
249	Y	Anchor Bent Type B Passing Bay					4			249-5				249-2		249-3		249-4		249-1						SP2
250	Y	Typical	1				3							250-2						250-1						SP2
251	Y	Typical		2			3							251-2	FULL					251-1	FULL					SP2
252	Y	Typical					3							252-2						252-1						SP2
253	Y	Typical		1			3							253-2	FULL					253-1						SP2
254	Y	Typical		2			3							254-2	FULL					254-1	FULL					SP2
255	P	Expansion joint	1	2		EJ	3							255-2		255-3	FULL			255-1	FULL					SP2
256	Y	Typical		2			3							256-2	FULL					256-1	FULL					SP2
257	Y	Typical		2			3	NEW						257-2	FULL					257-1	FULL					SP1

Docusign Envelope ID: EFC52467-A2A0-4DE2-91D5-216F30602930

SOUTHERN END OF HEADSTOCK -> NORTHERN END OF HEADSTOCKS

Pilebent no.	Included in Contract	Pilebent type	Stopaq bands to remov	Full piles to include	top jacket only to inclu	Expansion Joint	Headstock Condition (2	Underpass and type	painted history	Pile no.	Pile works	Pile no.	Pile works	Pile no.	Pile works	Pile no.	Pile works	Pile no.	Pile works	Pile no.	Pile works	Pile no.	Pile works	Pile no.	Pile works	Inclusion in Separable Portion (1 to 7)
258	Y	Typical		2			3							258-2	FULL					258-1	FULL					SP1
259	Y	Typical		2			3							259-2	FULL					259-1	FULL					SP1
260	Y	Typical		2			3							260-2	FULL					260-1	FULL					SP1
261	N						5							261-2		261-3		261-4		261-1						
262	Y	Typical		2			3							262-2	FULL					262-1	FULL					SP1
263	Y	Typical	1	1			3							263-2						263-1	FULL					SP1
264	Y	Typical		2			3							264-2	FULL					264-1	FULL					SP2
265	Y	Typical		2			3							265-2	FULL					265-1	FULL					SP2
266	Y	Typical		2			3							266-2	FULL					266-1	FULL					SP2
267	P	Expansion joint	1			EJ	3							267-2		267-3				267-1						SP2
268	Y	Typical					3							268-2						268-1						SP2
269	Y	Typical					3							269-2						269-1						SP2
270	Y	Typical					3							270-2						270-1						SP2
271	Y	Typical					3							271-2						271-1						SP2
272	Y	Typical					3	NEW						272-2						272-1						SP2
273	Y	Typical					3							273-2						273-1						SP2
274	Y	Anchor Bent Type B					3							274-2		274-3		274-4		274-1						SP2
275	Y	275	1	2			3							275-3						275-2	FULL	275-1	FULL			SP2
276	N						5							276-3						276-2		276-1				
277	N						5							277-3						277-2		277-1				
278	N						5							278-3						278-2		278-1				
279	N						5							279-3						279-2		279-1				
280	N					EJ	5							280-4						280-3		280-2		280-1		
281	Y	281		6			4							281-6	FULL	281-5	FULL	281-4	FULL	281-3	FULL	281-2	FULL	281-1	FULL	SP2
282	N						5			282-8		282-7		282-6		282-5		282-4		282-3		282-2		282-1		
283	N						5			283-8		283-7		283-6		283-5		283-4		283-3		283-2		283-1		
284	N						5							284-2						284-1						

Docusign Envelope ID: EFC52467-A2A0-4DE2-91D5-216F30602930

Pilebent	Scope statement
1	Pilebent 1 is not included in the contract
2	Pilebent 2 is not included in the contract
3	Pilebent 3 is included in the contract and is of type Typical.
4	Pilebent 4 is included in the contract and is of type Typical.
5	Pilebent 5 is included in the contract and is of type Typical.
6	Pilebent 6 is included in the contract and is of type Typical.
7	Pilebent 7 is included in the contract as 'Provisional, If Ordered' and is of type Expansion joint.
8	Pilebent 8 is included in the contract and is of type Typical.
9	Pilebent 9 is included in the contract and is of type Typical.
10	Pilebent 10 is included in the contract and is of type Typical.
11	Pilebent 11 is included in the contract and is of type Typical.
12	Pilebent 12 is included in the contract and is of type Typical.
13	Pilebent 13 is included in the contract and is of type Anchor Bent Type A.
14	Pilebent 14 is included in the contract and is of type Typical.
15	Pilebent 15 is included in the contract and is of type Typical.
16	Pilebent 16 is included in the contract and is of type Typical.
17	Pilebent 17 is included in the contract and is of type Typical. It includes an old style underpass remediation.
18	Pilebent 18 is included in the contract and is of type Typical.
19	Pilebent 19 is included in the contract as 'Provisional, If Ordered' and is of type Expansion joint.
20	Pilebent 20 is included in the contract and is of type Typical.
21	Pilebent 21 is included in the contract and is of type Typical.
22	Pilebent 22 is included in the contract and is of type Typical.
23	Pilebent 23 is included in the contract and is of type Typical.
24	Pilebent 24 is included in the contract and is of type Passing Bay. It includes, 1 StopAq band(s) to remove.
25	Pilebent 25 is included in the contract and is of type Anchor Bent Type A Passing Bay.
26	Pilebent 26 is included in the contract and is of type Typical. It includes, 1 StopAq band(s) to remove.
27	Pilebent 27 is included in the contract and is of type Typical.
28	Pilebent 28 is included in the contract and is of type Typical.
29	Pilebent 29 is included in the contract and is of type Typical.
30	Pilebent 30 is included in the contract and is of type Typical.
31	Pilebent 31 is included in the contract as 'Provisional, If Ordered' and is of type Expansion joint.
32	Pilebent 32 is included in the contract and is of type Typical. It includes an old style underpass remediation.
33	Pilebent 33 is included in the contract and is of type Typical.
34	Pilebent 34 is included in the contract and is of type Typical.
35	Pilebent 35 is included in the contract and is of type Typical.
36	Pilebent 36 is included in the contract and is of type Typical.
37	Pilebent 37 is included in the contract and is of type Anchor Bent Type A. It includes, 1 StopAq band(s) to remove.
38	Pilebent 38 is included in the contract and is of type Typical. It includes, 1 StopAq band(s) to remove.
39	Pilebent 39 is included in the contract and is of type Typical.
40	Pilebent 40 is included in the contract and is of type Typical.
41	Pilebent 41 is included in the contract and is of type Typical.
42	Pilebent 42 is included in the contract and is of type Typical. It includes, 1 StopAq band(s) to remove.
43	Pilebent 43 is included in the contract as 'Provisional, If Ordered' and is of type Expansion joint.
44	Pilebent 44 is included in the contract and is of type Typical.
45	Pilebent 45 is included in the contract and is of type Typical.

Docusign Envelope ID: EFC52467-A2A0-4DE2-91D5-216F30602930

Pilebent	Scope statement
46	Pilebent 46 is included in the contract and is of type Typical.
47	Pilebent 47 is included in the contract and is of type Typical. It includes an old style underpass remediation.
48	Pilebent 48 is included in the contract and is of type Typical.
49	Pilebent 49 is not included in the contract
50	Pilebent 50 is included in the contract and is of type Typical.
51	Pilebent 51 is included in the contract and is of type Typical.
52	Pilebent 52 is included in the contract and is of type Typical. It includes, 1 StopAq band(s) to remove.
53	Pilebent 53 is included in the contract and is of type Typical.
54	Pilebent 54 is included in the contract and is of type Typical.
55	Pilebent 55 is included in the contract as 'Provisional, If Ordered' and is of type Expansion joint.
56	Pilebent 56 is included in the contract and is of type Typical.
57	Pilebent 57 is included in the contract and is of type Typical. It includes, 1 StopAq band(s) to remove.
58	Pilebent 58 is included in the contract and is of type Typical.
59	Pilebent 59 is included in the contract and is of type Typical.
60	Pilebent 60 is not included in the contract
61	Pilebent 61 is not included in the contract
62	Pilebent 62 is included in the contract and is of type Typical. It includes an old style underpass remediation.
63	Pilebent 63 is included in the contract and is of type Typical.
64	Pilebent 64 is included in the contract and is of type Typical.
65	Pilebent 65 is included in the contract and is of type Typical.
66	Pilebent 66 is included in the contract and is of type Typical.
67	Pilebent 67 is included in the contract as 'Provisional, If Ordered' and is of type Expansion joint.
68	Pilebent 68 is included in the contract and is of type Typical.
69	Pilebent 69 is included in the contract and is of type Typical.
70	Pilebent 70 is included in the contract and is of type Typical.
71	Pilebent 71 is included in the contract and is of type Typical.
72	Pilebent 72 is included in the contract and is of type Typical.
73	Pilebent 73 is included in the contract and is of type Anchor Bent Type A.
74	Pilebent 74 is included in the contract and is of type Typical.
75	Pilebent 75 is included in the contract and is of type Typical.
76	Pilebent 76 is included in the contract and is of type Typical.
77	Pilebent 77 is included in the contract and is of type Typical. It includes an old style underpass remediation.
78	Pilebent 78 is included in the contract and is of type Typical.
79	Pilebent 79 is included in the contract as 'Provisional, If Ordered' and is of type Expansion joint.
80	Pilebent 80 is included in the contract and is of type Typical. It includes, 1 StopAq band(s) to remove.
81	Pilebent 81 is included in the contract and is of type Typical.
82	Pilebent 82 is included in the contract and is of type Typical.
83	Pilebent 83 is included in the contract and is of type Typical.
84	Pilebent 84 is included in the contract and is of type Typical.
85	Pilebent 85 is included in the contract and is of type Anchor Bent Type A.
86	Pilebent 86 is included in the contract and is of type Typical.
87	Pilebent 87 is included in the contract and is of type Typical.
88	Pilebent 88 is included in the contract and is of type Typical.
89	Pilebent 89 is included in the contract and is of type Typical.
90	Pilebent 90 is included in the contract and is of type Typical.

Docusign Envelope ID: EFC52467-A2A0-4DE2-91D5-216F30602930

Pilebent	Scope statement
91	Pilebent 91 is included in the contract as 'Provisional, If Ordered' and is of type Expansion joint.
92	Pilebent 92 is included in the contract and is of type Typical. It includes an old style underpass remediation.
93	Pilebent 93 is included in the contract and is of type Typical.
94	Pilebent 94 is included in the contract and is of type Typical.
95	Pilebent 95 is included in the contract and is of type Typical.
96	Pilebent 96 is included in the contract and is of type Typical.
97	Pilebent 97 is included in the contract and is of type Anchor Bent Type A. It includes, 1 StopAq band(s) to remove.
98	Pilebent 98 is included in the contract and is of type Typical. It includes, 1 StopAq band(s) to remove.
99	Pilebent 99 is included in the contract and is of type Typical.
100	Pilebent 100 is included in the contract and is of type Typical.
101	Pilebent 101 is included in the contract and is of type Typical.
102	Pilebent 102 is included in the contract and is of type Typical.
103	Pilebent 103 is included in the contract as 'Provisional, If Ordered' and is of type Expansion joint.
104	Pilebent 104 is included in the contract and is of type Typical.
105	Pilebent 105 is included in the contract and is of type Typical.
106	Pilebent 106 is included in the contract and is of type Typical.
107	Pilebent 107 is included in the contract and is of type Typical. It includes an old style underpass remediation.
108	Pilebent 108 is included in the contract and is of type Passing Bay. It includes, 1 StopAq band(s) to remove.
109	Pilebent 109 is included in the contract and is of type Anchor Bent Type A Passing Bay. It includes, 1 StopAq band(s) to remove.
110	Pilebent 110 is included in the contract and is of type Typical.
111	Pilebent 111 is included in the contract and is of type Typical. It includes, 1 StopAq band(s) to remove.
112	Pilebent 112 is included in the contract and is of type Typical. It includes, 1 StopAq band(s) to remove.
113	Pilebent 113 is included in the contract and is of type Typical.
114	Pilebent 114 is included in the contract and is of type Typical.
115	Pilebent 115 is included in the contract as 'Provisional, If Ordered' and is of type Expansion joint.
116	Pilebent 116 is included in the contract and is of type Typical.
117	Pilebent 117 is included in the contract and is of type Typical.
118	Pilebent 118 is included in the contract and is of type Typical.
119	Pilebent 119 is included in the contract and is of type Typical.
120	Pilebent 120 is included in the contract and is of type Typical. It includes, 1 StopAq band(s) to remove.
121	Pilebent 121 is included in the contract and is of type Anchor Bent Type A.
122	Pilebent 122 is included in the contract and is of type Typical. It includes an old style underpass remediation.
123	Pilebent 123 is included in the contract and is of type Typical.
124	Pilebent 124 is included in the contract and is of type Typical.
125	Pilebent 125 is included in the contract and is of type Typical.
126	Pilebent 126 is included in the contract and is of type Typical.
127	Pilebent 127 is included in the contract as 'Provisional, If Ordered' and is of type Expansion joint. It includes, 1 StopAq band(s) to remove.
128	Pilebent 128 is included in the contract and is of type Typical.
129	Pilebent 129 is included in the contract and is of type Typical.
130	Pilebent 130 is included in the contract and is of type Typical.
131	Pilebent 131 is included in the contract and is of type Typical.
132	Pilebent 132 is included in the contract and is of type Typical.
133	Pilebent 133 is not included in the contract
134	Pilebent 134 is included in the contract and is of type Typical.
135	Pilebent 135 is included in the contract and is of type Typical.

Docusign Envelope ID: EFC52467-A2A0-4DE2-91D5-216F30602930

Pilebent	Scope statement
136	Pilebent 136 is included in the contract and is of type Typical. It includes, 2 StopAq band(s) to remove.
137	Pilebent 137 is included in the contract and is of type Typical. It includes an old style underpass remediation.
138	Pilebent 138 is included in the contract and is of type Typical. It includes, 1 StopAq band(s) to remove.
139	Pilebent 139 is not included in the contract
140	Pilebent 140 is included in the contract and is of type Typical. It includes, 1 StopAq band(s) to remove.
141	Pilebent 141 is included in the contract and is of type Typical. It includes, 2 StopAq band(s) to remove.
142	Pilebent 142 is included in the contract and is of type Typical.
143	Pilebent 143 is included in the contract and is of type Typical. It includes, 1 StopAq band(s) to remove.
144	Pilebent 144 is included in the contract and is of type Typical.
145	Pilebent 145 is included in the contract and is of type Anchor Bent Type A.
146	Pilebent 146 is included in the contract and is of type Typical. It includes, 2 StopAq band(s) to remove.
147	Pilebent 147 is included in the contract and is of type Typical.
148	Pilebent 148 is included in the contract and is of type Typical.
149	Pilebent 149 is included in the contract and is of type Typical. It includes, 1 StopAq band(s) to remove.
150	Pilebent 150 is included in the contract and is of type Typical. It includes, 2 StopAq band(s) to remove.
151	Pilebent 151 is not included in the contract
152	Pilebent 152 is not included in the contract
153	Pilebent 153 is included in the contract and is of type Typical. It includes, 2 StopAq band(s) to remove.
154	Pilebent 154 is included in the contract and is of type Typical. It includes, 1 StopAq band(s) to remove.
155	Pilebent 155 is included in the contract and is of type Typical.
156	Pilebent 156 is included in the contract and is of type Passing Bay. It includes, 1 StopAq band(s) to remove.
157	Pilebent 157 is included in the contract and is of type Anchor Bent Type A Passing Bay.
158	Pilebent 158 is included in the contract and is of type Typical.
159	Pilebent 159 is included in the contract and is of type Typical.
160	Pilebent 160 is included in the contract and is of type Typical. It includes, 1 StopAq band(s) to remove.
161	Pilebent 161 is included in the contract and is of type Typical.
162	Pilebent 162 is included in the contract and is of type Typical.
163	Pilebent 163 is included in the contract as 'Provisional, If Ordered' and is of type Expansion joint.
164	Pilebent 164 is included in the contract and is of type Typical.
165	Pilebent 165 is included in the contract and is of type Typical. It includes, 1 StopAq band(s) to remove.
166	Pilebent 166 is included in the contract and is of type Typical.
167	Pilebent 167 is included in the contract and is of type Typical. It includes a new style underpass remediation.
168	Pilebent 168 is included in the contract and is of type Anchor Bent Type B.
169	Pilebent 169 is included in the contract and is of type Typical.
170	Pilebent 170 is included in the contract and is of type Typical. It includes, 1 StopAq band(s) to remove.
171	Pilebent 171 is included in the contract and is of type Typical.
172	Pilebent 172 is included in the contract and is of type Typical.
173	Pilebent 173 is included in the contract as 'Provisional, If Ordered' and is of type Expansion joint. It includes, 1 StopAq band(s) to remove.
174	Pilebent 174 is included in the contract and is of type Typical.
175	Pilebent 175 is included in the contract and is of type Typical.
176	Pilebent 176 is included in the contract and is of type Typical.
177	Pilebent 177 is included in the contract and is of type Anchor Bent Type B. It includes, 2 StopAq band(s) to remove.
178	Pilebent 178 is included in the contract and is of type Typical.
179	Pilebent 179 is included in the contract and is of type Typical. It includes, 1 StopAq band(s) to remove.
180	Pilebent 180 is included in the contract and is of type Typical.

Docusign Envelope ID: EFC52467-A2A0-4DE2-91D5-216F30602930

Pilebent	Scope statement
181	Pilebent 181 is included in the contract as 'Provisional, If Ordered' and is of type Expansion joint.
182	Pilebent 182 is included in the contract and is of type Typical. It includes a new style underpass remediation.
183	Pilebent 183 is included in the contract and is of type Typical.
184	Pilebent 184 is included in the contract and is of type Typical.
185	Pilebent 185 is not included in the contract
186	Pilebent 186 is included in the contract and is of type Typical.
187	Pilebent 187 is included in the contract and is of type Typical.
188	Pilebent 188 is included in the contract and is of type Typical.
189	Pilebent 189 is not included in the contract
190	Pilebent 190 is included in the contract and is of type Typical.
191	Pilebent 191 is included in the contract and is of type Typical.
192	Pilebent 192 is included in the contract and is of type Typical.
193	Pilebent 193 is included in the contract and is of type Anchor Bent Type B.
194	Pilebent 194 is included in the contract and is of type Typical. It includes a new style underpass remediation.
195	Pilebent 195 is included in the contract and is of type Typical.
196	Pilebent 196 is included in the contract and is of type Typical. It includes, 2 StopAq band(s) to remove.
197	Pilebent 197 is included in the contract as 'Provisional, If Ordered' and is of type Expansion joint.
198	Pilebent 198 is included in the contract and is of type Typical.
199	Pilebent 199 is included in the contract and is of type Typical. It includes, 1 StopAq band(s) to remove.
200	Pilebent 200 is included in the contract and is of type Passing Bay. It includes, 2 piles requiring scaffold, repair and wrapping.
201	Pilebent 201 is included in the contract and is of type Anchor Bent Type B Passing Bay. It includes, 1 StopAq band(s) to remove, 1 piles requiring scaffold, repair and wrapping of the top jacket only
202	Pilebent 202 is included in the contract and is of type Typical. It includes, 1 piles requiring scaffold, repair and wrapping.
203	Pilebent 203 is included in the contract and is of type Typical.
204	Pilebent 204 is included in the contract and is of type Typical. It includes, 1 piles requiring scaffold, repair and wrapping.
205	Pilebent 205 is included in the contract as 'Provisional, If Ordered' and is of type Expansion joint. It includes, 2 piles requiring scaffold, repair and wrapping of the top jacket only
206	Pilebent 206 is included in the contract and is of type Typical. It includes, 1 piles requiring scaffold, repair and wrapping.
207	Pilebent 207 is included in the contract and is of type Typical. It includes, 1 StopAq band(s) to remove.
208	Pilebent 208 is included in the contract and is of type Typical. It includes, 1 piles requiring scaffold, repair and wrapping.
209	Pilebent 209 is included in the contract and is of type Anchor Bent Type B. It includes, 1 piles requiring scaffold, repair and wrapping, 1 piles requiring scaffold, repair and wrapping of the top jacket only
210	Pilebent 210 is included in the contract and is of type Typical. It includes, 1 piles requiring scaffold, repair and wrapping.
211	Pilebent 211 is included in the contract and is of type Typical. It includes, 1 piles requiring scaffold, repair and wrapping.
212	Pilebent 212 is included in the contract and is of type Typical. It includes, 1 piles requiring scaffold, repair and wrapping. It includes a new style underpass remediation.
213	Pilebent 213 is included in the contract as 'Provisional, If Ordered' and is of type Expansion joint. It includes, 3 piles requiring scaffold, repair and wrapping.
214	Pilebent 214 is included in the contract and is of type Typical. It includes, 1 piles requiring scaffold, repair and wrapping, 1 piles requiring scaffold, repair and wrapping of the top jacket only
215	Pilebent 215 is included in the contract and is of type Typical. It includes, 1 StopAq band(s) to remove, 1 piles requiring scaffold, repair and wrapping of the top jacket only
216	Pilebent 216 is included in the contract and is of type Typical. It includes, 1 piles requiring scaffold, repair and wrapping, 1 piles requiring scaffold, repair and wrapping of the top jacket only
217	Pilebent 217 is included in the contract and is of type Anchor Bent Type B. It includes, 2 StopAq band(s) to remove, 1 piles requiring scaffold, repair and wrapping.
218	Pilebent 218 is included in the contract and is of type Typical. It includes, 1 StopAq band(s) to remove, 1 piles requiring scaffold, repair and wrapping.
219	Pilebent 219 is included in the contract and is of type Typical. It includes, 1 piles requiring scaffold, repair and wrapping, 1 piles requiring scaffold, repair and wrapping of the top jacket only
220	Pilebent 220 is included in the contract and is of type Typical.
221	Pilebent 221 is not included in the contract
222	Pilebent 222 is included in the contract and is of type Typical.
223	Pilebent 223 is included in the contract and is of type Typical.
224	Pilebent 224 is included in the contract and is of type Typical.
225	Pilebent 225 is included in the contract and is of type Typical.

Docusign Envelope ID: EFC52467-A2A0-4DE2-91D5-216F30602930

Pilebent	Scope statement
226	Pilebent 226 is not included in the contract
227	Pilebent 227 is included in the contract and is of type Typical. It includes, 1 piles requiring scaffold, repair and wrapping. It includes a new style underpass remediation.
228	Pilebent 228 is included in the contract and is of type Typical. It includes, 1 piles requiring scaffold, repair and wrapping, 1 piles requiring scaffold, repair and wrapping of the top jacket only
229	Pilebent 229 is included in the contract and is of type Typical. It includes, 1 StopAq band(s) to remove, 1 piles requiring scaffold, repair and wrapping of the top jacket only
230	Pilebent 230 is included in the contract and is of type Typical.
231	Pilebent 231 is included in the contract as 'Provisional, If Ordered' and is of type Expansion joint. It includes, 2 piles requiring scaffold, repair and wrapping, 1 piles requiring scaffold, repair and wrapping of the top jacket only
232	Pilebent 232 is included in the contract and is of type Typical. It includes, 1 piles requiring scaffold, repair and wrapping.
233	Pilebent 233 is included in the contract and is of type Typical.
234	Pilebent 234 is included in the contract and is of type Typical. It includes, 1 piles requiring scaffold, repair and wrapping, 1 piles requiring scaffold, repair and wrapping of the top jacket only
235	Pilebent 235 is included in the contract and is of type Typical. It includes, 1 StopAq band(s) to remove, 1 piles requiring scaffold, repair and wrapping.
236	Pilebent 236 is included in the contract and is of type Typical. It includes, 2 piles requiring scaffold, repair and wrapping.
237	Pilebent 237 is not included in the contract
238	Pilebent 238 is included in the contract and is of type Typical.
239	Pilebent 239 is included in the contract and is of type Typical.
240	Pilebent 240 is included in the contract and is of type Typical. It includes, 1 StopAq band(s) to remove, 1 piles requiring scaffold, repair and wrapping.
241	Pilebent 241 is not included in the contract
242	Pilebent 242 is not included in the contract
243	Pilebent 243 is not included in the contract
244	Pilebent 244 is included in the contract and is of type Typical. It includes, 1 StopAq band(s) to remove.
245	Pilebent 245 is included in the contract and is of type Typical.
246	Pilebent 246 is included in the contract and is of type Typical. It includes, 2 StopAq band(s) to remove.
247	Pilebent 247 is not included in the contract
248	Pilebent 248 is included in the contract and is of type Passing Bay. It includes, 1 piles requiring scaffold, repair and wrapping.
249	Pilebent 249 is included in the contract and is of type Anchor Bent Type B Passing Bay.
250	Pilebent 250 is included in the contract and is of type Typical. It includes, 1 StopAq band(s) to remove.
251	Pilebent 251 is included in the contract and is of type Typical. It includes, 2 piles requiring scaffold, repair and wrapping.
252	Pilebent 252 is included in the contract and is of type Typical.
253	Pilebent 253 is included in the contract and is of type Typical. It includes, 1 piles requiring scaffold, repair and wrapping.
254	Pilebent 254 is included in the contract and is of type Typical. It includes, 2 piles requiring scaffold, repair and wrapping.
255	Pilebent 255 is included in the contract as 'Provisional, If Ordered' and is of type Expansion joint. It includes, 1 StopAq band(s) to remove, 2 piles requiring scaffold, repair and wrapping.
256	Pilebent 256 is included in the contract and is of type Typical. It includes, 2 piles requiring scaffold, repair and wrapping.
257	Pilebent 257 is included in the contract and is of type Typical. It includes, 2 piles requiring scaffold, repair and wrapping. It includes a new style underpass remediation.
258	Pilebent 258 is included in the contract and is of type Typical. It includes, 2 piles requiring scaffold, repair and wrapping.
259	Pilebent 259 is included in the contract and is of type Typical. It includes, 2 piles requiring scaffold, repair and wrapping.
260	Pilebent 260 is included in the contract and is of type Typical. It includes, 2 piles requiring scaffold, repair and wrapping.
261	Pilebent 261 is not included in the contract
262	Pilebent 262 is included in the contract and is of type Typical. It includes, 2 piles requiring scaffold, repair and wrapping.
263	Pilebent 263 is included in the contract and is of type Typical. It includes, 1 StopAq band(s) to remove, 1 piles requiring scaffold, repair and wrapping.
264	Pilebent 264 is included in the contract and is of type Typical. It includes, 2 piles requiring scaffold, repair and wrapping.
265	Pilebent 265 is included in the contract and is of type Typical. It includes, 2 piles requiring scaffold, repair and wrapping.
266	Pilebent 266 is included in the contract and is of type Typical. It includes, 2 piles requiring scaffold, repair and wrapping.
267	Pilebent 267 is included in the contract as 'Provisional, If Ordered' and is of type Expansion joint. It includes, 1 StopAq band(s) to remove.
268	Pilebent 268 is included in the contract and is of type Typical.
269	Pilebent 269 is included in the contract and is of type Typical.
270	Pilebent 270 is included in the contract and is of type Typical.

Docusign Envelope ID: EFC52467-A2A0-4DE2-91D5-216F30602930

Pilebent	Scope statement
271	Pilebent 271 is included in the contract and is of type Typical.
272	Pilebent 272 is included in the contract and is of type Typical. It includes a new style underpass remediation.
273	Pilebent 273 is included in the contract and is of type Typical.
274	Pilebent 274 is included in the contract and is of type Anchor Bent Type B.
275	Pilebent 275 is included in the contract and is of type 275. It includes, 1 StopAq band(s) to remove, 2 piles requiring scaffold, repair and wrapping.
276	Pilebent 276 is not included in the contract
277	Pilebent 277 is not included in the contract
278	Pilebent 278 is not included in the contract
279	Pilebent 279 is not included in the contract
280	Pilebent 280 is not included in the contract
281	Pilebent 281 is included in the contract and is of type 281. It includes, 6 piles requiring scaffold, repair and wrapping.
282	Pilebent 282 is not included in the contract
283	Pilebent 283 is not included in the contract
284	Pilebent 284 is not included in the contract

Docusign Envelope ID: EFC52467-A2A0-4DE2-91D5-216F30602930

APPENDIX I PILE INSPECTION RECORD SHEET

Docusign Envelope ID: EFC52467-A2A0-4DE2-91D5-216F30602930

850 DIAMETER PILE (2670mm CIRC)

PILE REFERENCE:_____

DATE OF MEASUREMENT:_____

MEASURED BY:_____

1. Refer to utilisation diagram for particular pile
2. Locate areas larger than 100mm across, where remaining thickness is less than allowable over the area (repair areas)
3. Sketch repair areas on grid below together with any measurements
4. For each repair area, mark thicknesses and uncorroded areas around circumference of pile, 500mm above and below the area. Uncorroded sections may be coloured green.
5. Sketch proposed repair patch.
6. Pass on to Engineer for approval

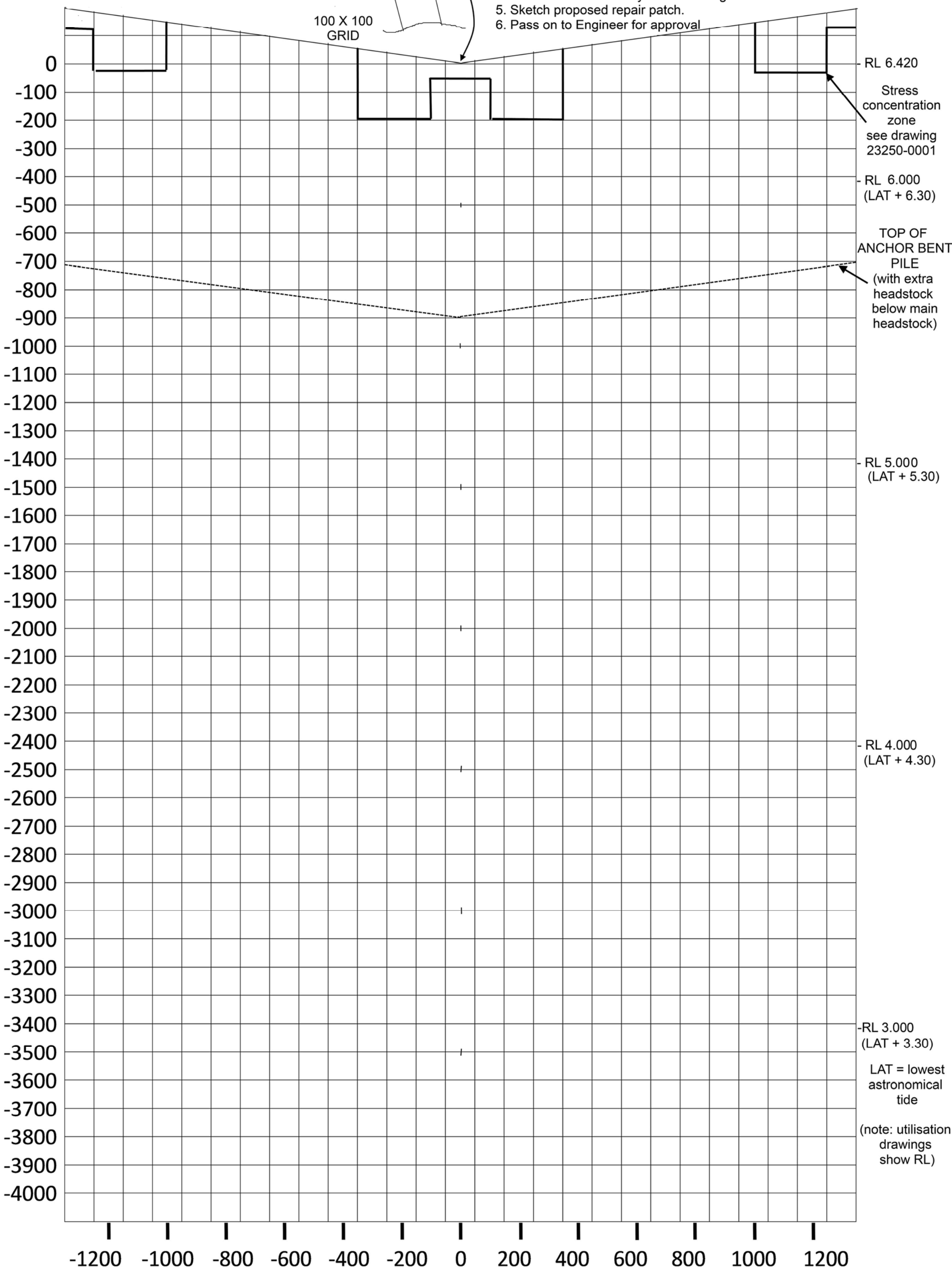

Docusign Envelope ID: EFC52467-A2A0-4DE2-91D5-216F30602930

APPENDIX J LUCINDA JETTY PILE UTILISATION AND REPAIR DIAGRAMS

Note these are likely to be modified during the contract or tender period

Docusign Envelope ID: EFC52467-A2A0-4DE2-91D5-216F30602930

REPAIR PROCEDURES

READ UTILISATION AT OBSERVED DAMAGE LOCATION FOR BENT AND RL FROM DRAWINGS 232350-0002 AND 0003. USE 100% UTILISATION AND NO ALLOWANCE FOR CONCENTRATED CORROSION "Y" IF DAMAGE IS WITHIN STRESS CONCENTRATION ZONE.

1. IS CORRODED AREA HOLED?
   - YES: PLATE REPAIR IN ACCORDANCE WITH REPAIRS SHOWN ON THIS DRAWING. REFER TO THE ENGINEER FOR FURTHER INVESTIGATION
   - NO: GO TO STEP 2
2. IS THE OVERALL CORRODED AREA LARGER THAN "Y"?
   - NO: NO REPAIR REQUIRED
   - YES: GO TO STEP 3
3. IS THE MINIMUM RESIDUAL THICKNESS GREATER THAN "Z"?
   - YES: NO REPAIR REQUIRED
   - NO: IS THE SPECIFIC AREA UNDER THICKNESS LESS THAN "Y"?
     - A). NO REPAIR REQUIRED
     - OR
     - B). PAD WELD TO THICKNESS GREATER THAN "Z"

STEELWORK NOTES

1. ALL STEEL PLATES TO AS3678 AND 3679.1 U.N.O.
2. ALL PLATES TO BE GR250 U.N.O.
3. FABRICATION TO BE IN ACCORDANCE WITH AS 4100
4. ALL WELDING IN ACCORDANCE WITH AS 1554.1 CATEGORY S.P.
5. ALL WELDS TO BE 8mm CONTINUOUS FILET WELD E41XX U.N.O.
6. REMOVE ALL SHARP EDGES, BURRS, CORNERS, WELD SLAG ETC
7. GRIND ALL CORNERS AND EDGES OF REPAIR PLATE TO MINIMUM 2mm RADIUS
8. NO PIN HOLES PERMITTED IN WELD

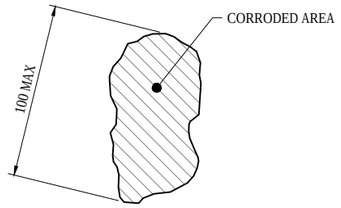

"Y"

MAXIMUM ALLOWABLE AREA OF CONCENTRATED CORROSION

(N.T.S.)

PERCENTAGE OF FULL SECTION UTILISATION	DIMENSION "Z" RESIDUAL PLATE THICKNESS IN NOMINAL 10mm PLATE	DIMENSION "Z" RESIDUAL HEADSTOCK PLATE THICKNESS IN NOMINAL 12mm PLATE
90 - 100%	9.5mm*	11.4mm*
80 - 90%	9.3mm	11.3mm
70 - 80%	8.6mm	10.6mm
60 - 70%	7.9mm	10.0mm
50 - 60%	7.1mm	9.2mm
40 - 50%	6.3mm	8.4mm
0 - 40%	6.3mm	7.6mm

* (5% LOSS ACCEPTED)

"Z"

UTILISATION RESIDUAL PLATE THICKNESS TABLE FOR PILE AND HEADSTOCK MEMBERS

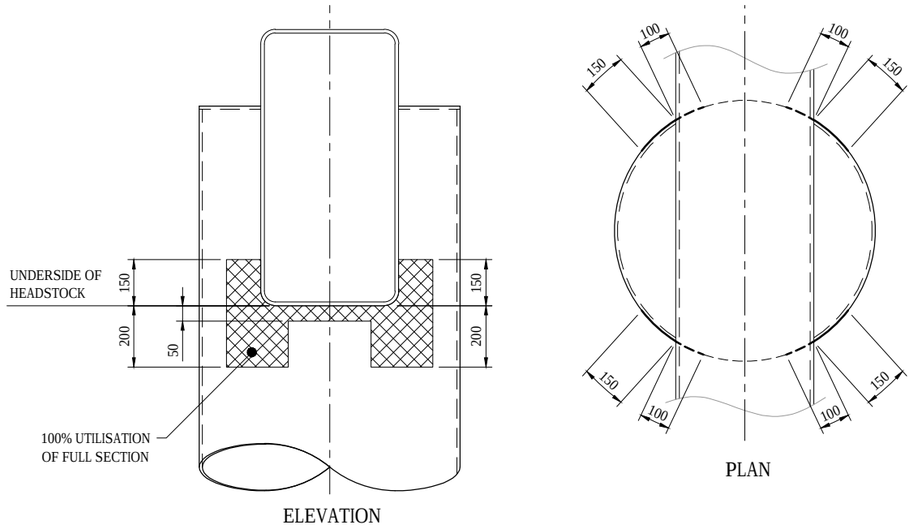

DEFINITION OF STRESS CONCENTRATION ZONE

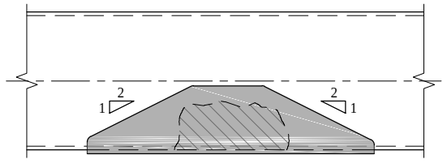

SECTION C

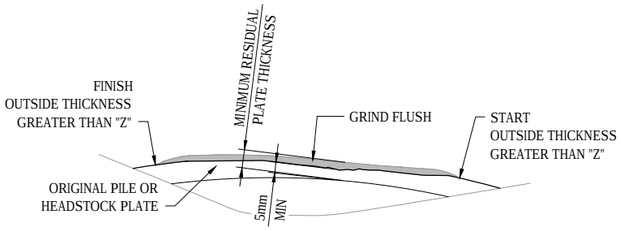

PAD WELD WITH ONE RUN MAX 3mm THICK. GRIND FLUSH.

SECTION D

N.T.S.

TYPICAL PAD WELD REPAIR

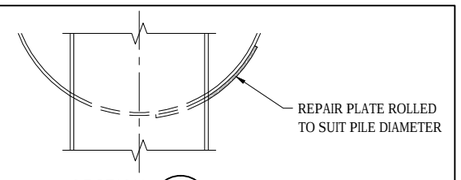

SECTION A

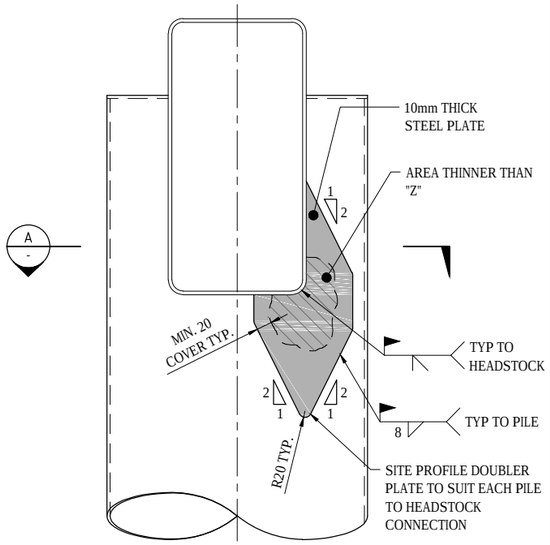

STRUCTURAL REPAIR FOR CORROSION IN VICINITY OF PILE / HEADSTOCK CONNECTION

NOTE: GEOMETRY DETAILED IS FOR DEVELOPED PLATE

UTILISATION	X
0 - 80%	1.0
80 - 90%	1.5
90 - 100%	2.0

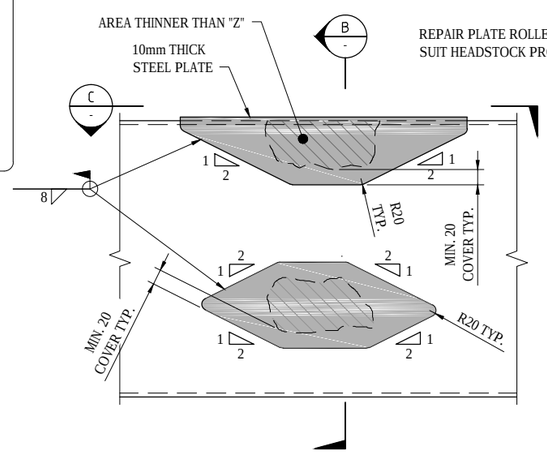

STRUCTURAL REPAIR FOR CORROSION TO HEADSTOCK

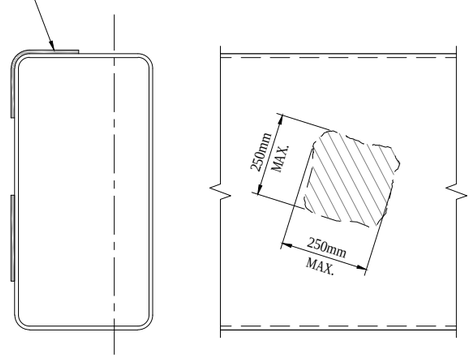

SECTION B

PAD WELD REPAIR TO HEADSTOCK

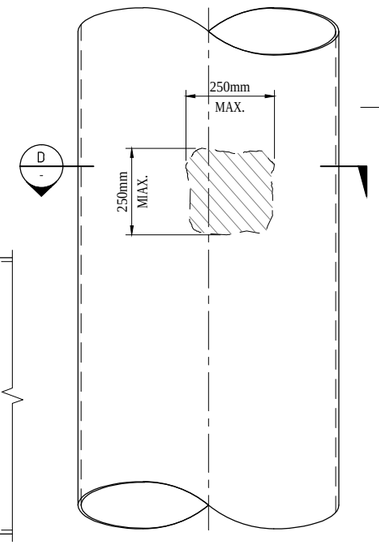

TYPICAL PAD WELD REPAIR

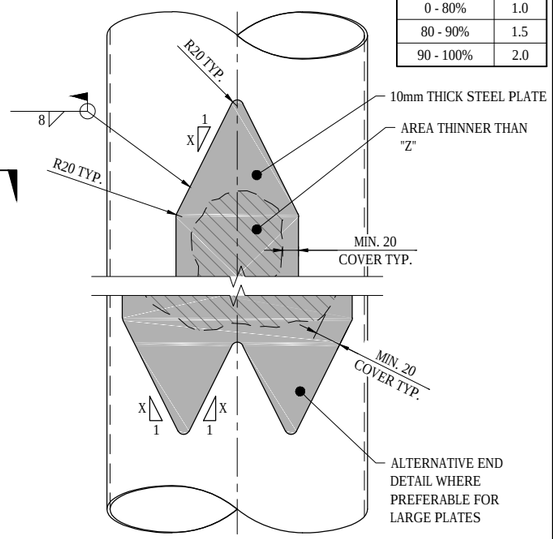

STRUCTURAL REPAIR FOR CORROSION TO PILE

NOTE: GEOMETRY DETAILED IS FOR DEVELOPED PLATE

06.02.2013@14:27:27 P:\MRN\232350\LBST petty structural utilisation assessment\CADD\DRGS\MRN\232350-D0v1-0001.dwg LOGIN NAME: : dhys.holman@NED102450

aurecon
www.aurecongroup.com

A person using the Aurecon drawings and other data accepts the risk of using the drawings and other data:
1. In electronic form without requesting and checking them for accuracy against the original hard copy versions;
2. For any purposes not agreed to in writing by Aurecon.
Wherever a discrepancy in the contract documents is found and unless directed otherwise by the Principal/Engineer, the contractor shall adopt, at their own cost the greater quantum, class of finish, grade, or specification where applicable.

CLIENT: QUEENSLAND SUGAR LIMITED

QSL

REV	DATE	REVISION DETAILS	APP
A	6.02.13	ISSUED FOR CONSTRUCTION	AON

DRAWN: R. HOLMAN
DESIGNED: A. FLEER
CHECKED: A. NILSEN
APPROVED: A. NILSEN
DATE: 6.02.13

PROJECT: LUCINDA BULK SUGAR TERMINAL STRUCTURAL UTILISATION ASSESSMENT

TITLE: APPROACH JETTY TYPICAL REPAIR DETAILS

FOR CONSTRUCTION

PROJECT No.: 232350
SCALE: 1:10
SIZE: A1
DRAWING No.: 0001
REV: A

Docusign Envelope ID: EFC52467-A2A0-4DE2-91D5-216F30602930

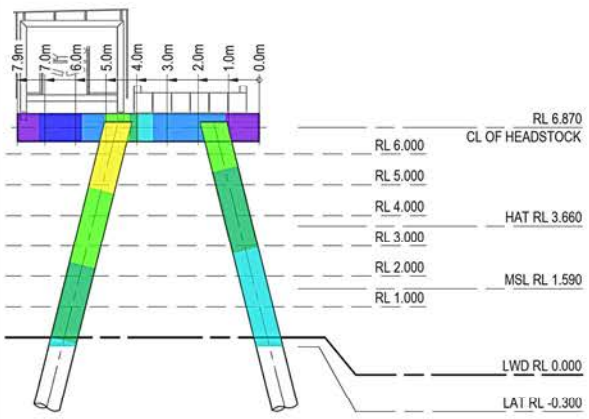

TYPICAL JETTY BENT 850Ø PILES
REPRESENTS BENT 3 UP TO 46*

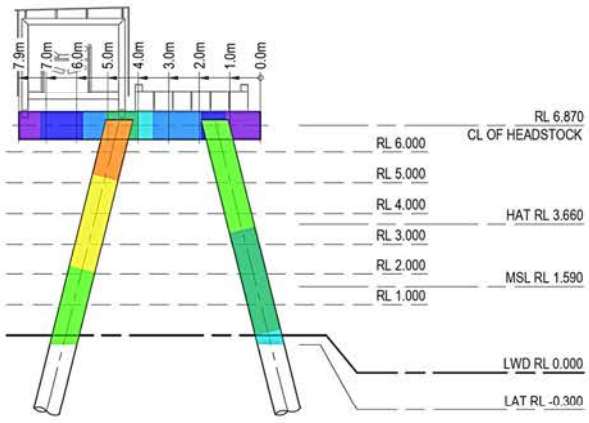

TYPICAL JETTY BENT 850Ø PILES
REPRESENTS BENT 47 UP TO 187*

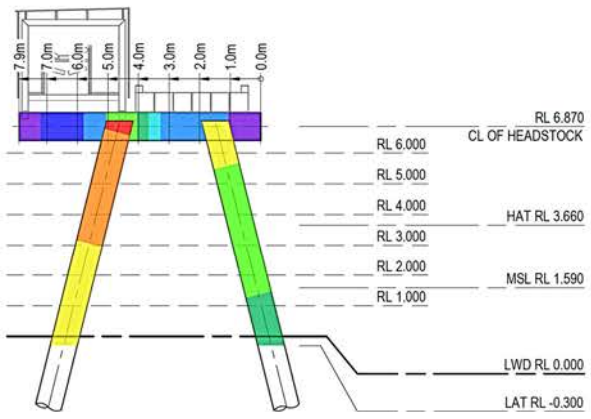

TYPICAL JETTY BENT 850Ø PILES
REPRESENTS BENT 188 UP TO 212*

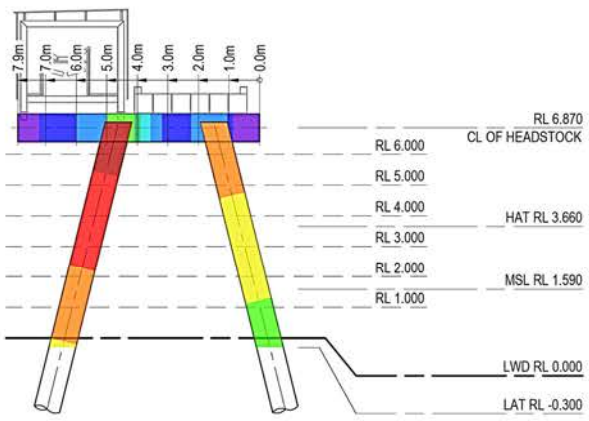

TYPICAL JETTY BENT 850Ø PILES
REPRESENTS BENT 213 UP TO 236*

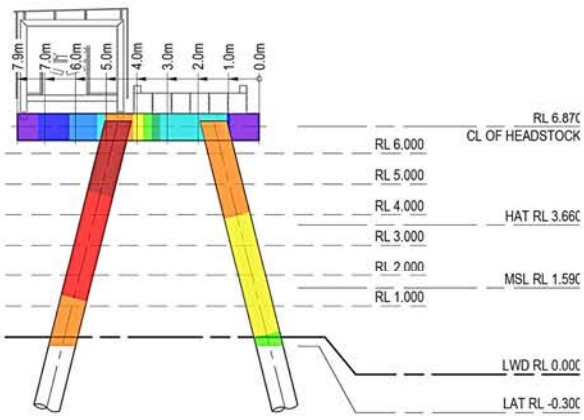

TYPICAL JETTY BENT 850Ø PILES
REPRESENTS BENT 237 UP TO 252*

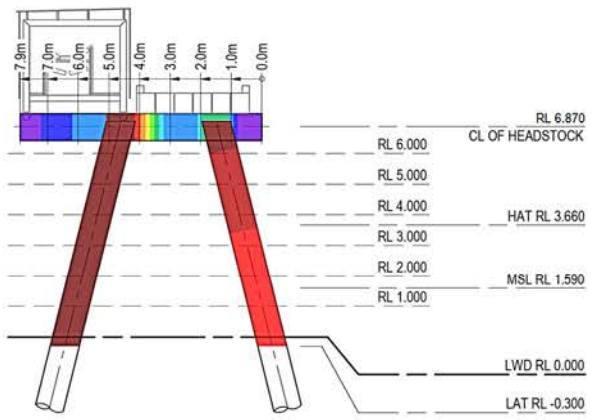

TYPICAL JETTY BENT 920Ø PILES
REPRESENTS BENT 253 UP TO 261*

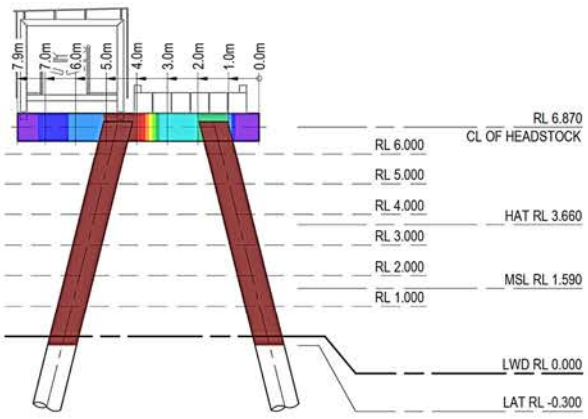

TYPICAL JETTY BENT 920Ø PILES
REPRESENTS BENT 262 UP TO 268*

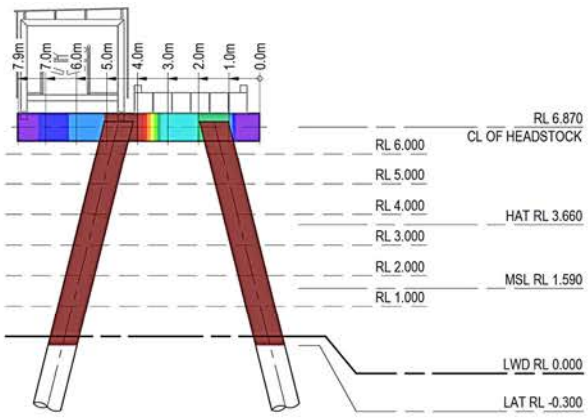

TYPICAL JETTY BENT 920Ø PILES
REPRESENTS BENT 269 UP TO 273*

UTILISATION LEGEND

- 0 - 10%
- 10 - 20%
- 20 - 30%
- 30 - 40%
- 40 - 50%
- 50 - 60%
- 60 - 70%
- 70 - 80%
- 80 - 90%
- 90 - 100%
- 100% +

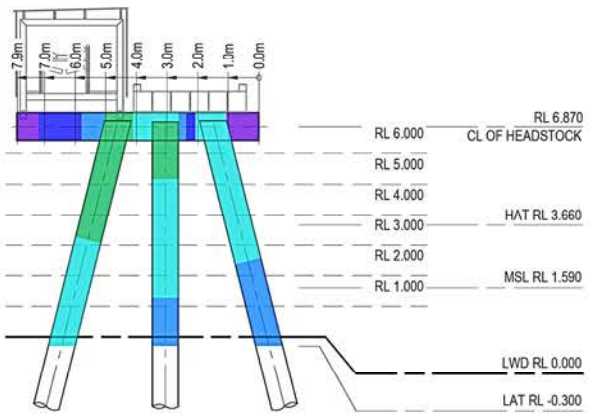

TYPICAL JETTY EXPANSION BENT
850Ø PILES
REPRESENTS BENT 7 TO 55*

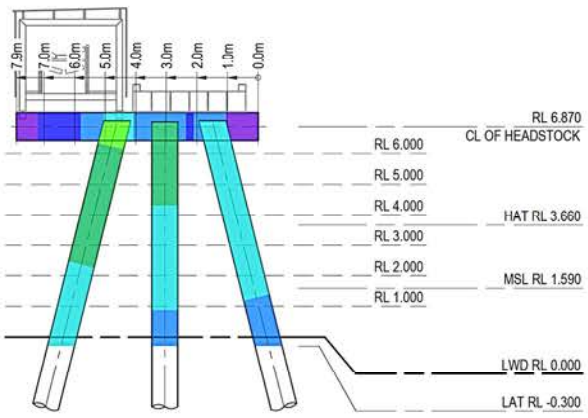

TYPICAL JETTY EXPANSION BENT
850Ø PILES
REPRESENTS BENT 67 TO 181*

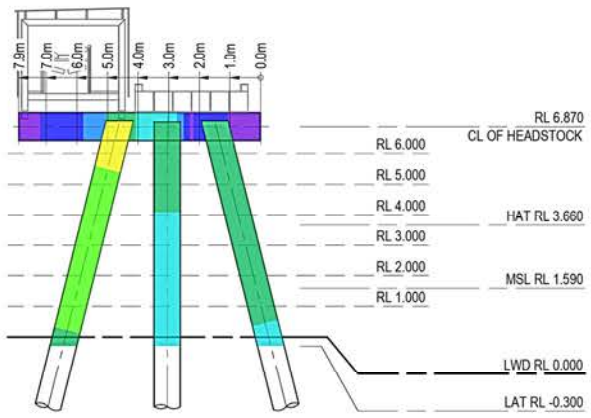

TYPICAL JETTY EXPANSION BENT
850Ø PILES
REPRESENTS BENT 189 TO 205*

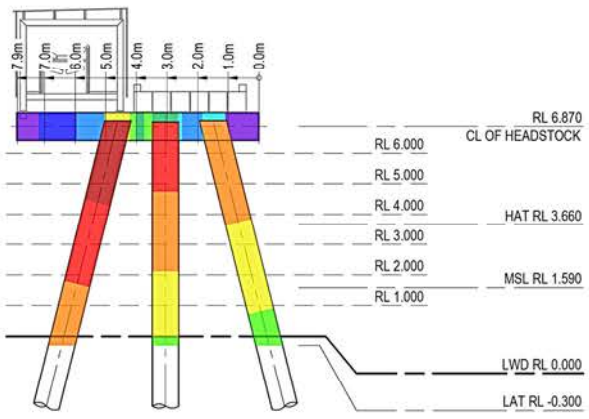

TYPICAL JETTY EXPANSION BENT
850Ø PILES
REPRESENTS BENT 213 TO 243*

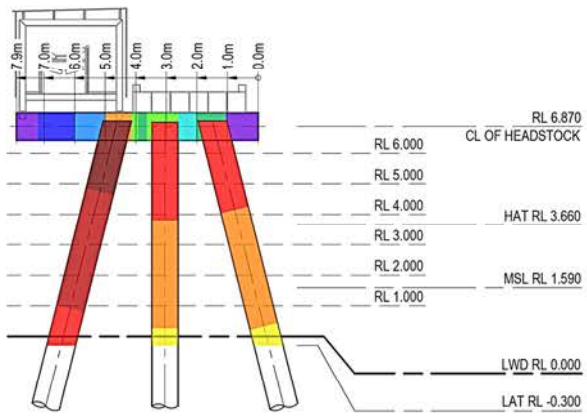

JETTY EXPANSION BENT
920Ø OUTER / 850Ø CENTRAL PILES
REPRESENTS BENT 255

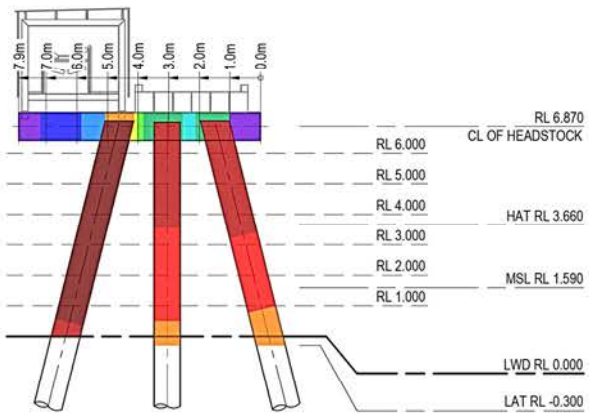

JETTY EXPANSION BENT
920Ø OUTER / 850Ø CENTRAL PILES
REPRESENTS BENT 267

Docusign Envelope ID: EFC52467-A2A0-4DE2-91D5-216F30602930

APPENDIX K JETTY DRAWINGS

Drawing number	Description
CTQ-1122-S-001	Approach jetty - General plan and sections
CTQ-1122-S-002	Approach jetty - Pile schedule
CTQ-1122-S-003	Approach jetty - Sheet 1 superstructure layout
CTQ-1122-S-004	Approach jetty - Sheet 2 superstructure layout
CTQ-1122-S-005	Approach jetty - Typical cross section
CTQ-1122-S-006	Approach jetty - Type 'A' anchor bent
CTQ-1122-S-007	Approach jetty - Type 'B' anchor bent
CTQ-1122-S-008	Approach jetty - Passing bay details
CTQ-1122-S-010	Approach jetty - Pilebents no.s 275-279
CTQ-1122-S-012	Approach jetty - Pilebent no. 281
CTQ-1122-S-015	Approach jetty - Miscellaneous details
CTQ-1122-S-018	Approach jetty - Standard conveyor gallery
CTQ-1122-S-020	Approach jetty - Standard span cladding
CTQ-1122-S-021	Approach jetty - Gallery flashing details
CTQ-1122-S-022	Approach jetty - Conveyor stringer details
CTQ-1122-S-023	Approach jetty - Gallery tolerances
CTQ-1122-S-024	Approach jetty - Variations to standard gallery
CTQ-1122-S-025	Approach jetty - Variations to cladding
CTQ-1122-S-026	Approach jetty - Cross-under details
CTQ-1122-S-030	Approach jetty - Pre-cast roadway GA
CTQ-1122-S-031	Approach jetty - Standard roadway girder details
CTQ-1122-S-032	Approach jetty - Expansion joint details
CTQ-1122-S-033	Approach jetty - Pre-cast roadway girder arrangement and details
CTQ-1122-S-034	Approach jetty - Pre-cast roadway girder details sht 2
CTQ-1122-S-038	Approach jetty - As-contructed piles
CTQ-1122-S-039	Approach jetty - As-contructed piles

Docusign Envelope ID: EFC52467-A2A0-4DE2-91D5-216F30602930

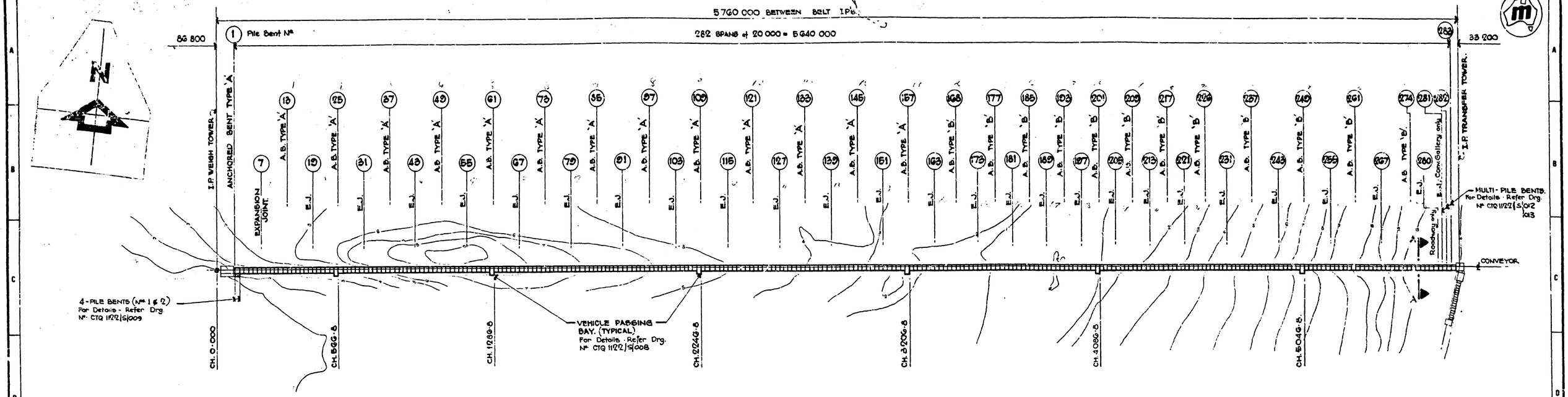

NOTE:
A.B. = ANCHORED BENT.
ANCHORED BENTS TYPE 'A' = 1 ANCHOR PILE - Refer Drg. No CTQ 1122/S/006 for Details
ANCHORED BENTS TYPE 'B' = 2 ANCHOR PILES - Refer Drg. No CTQ 1122/S/007 for Details.
E.J. = EXPANSION JOINT. - Refer Drgs No {CTQ 1122/S/003 / CTQ 1122/S/012} for Details.

PLAN - APPROACH JETTY.

SCALE: 1:7,500.

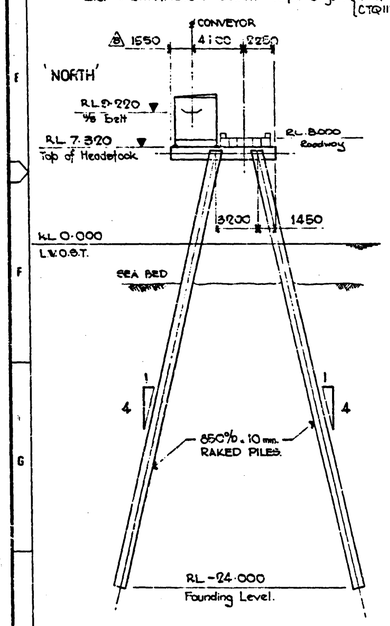

TYP. CROSS-SECTION.

PILE BENT No (10) SHOWN.

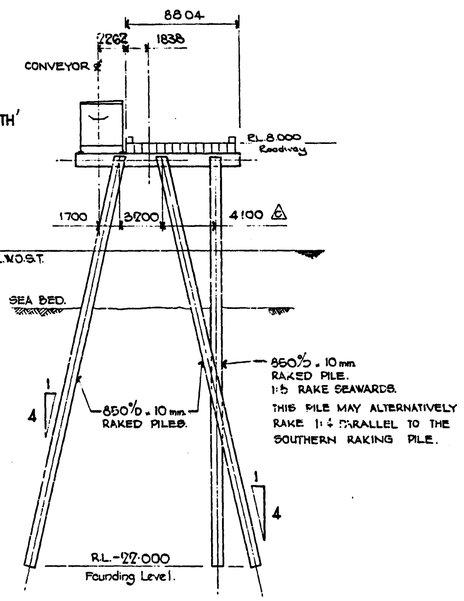

TYP. PASSING-BAY SECTION.

BAY AT CHG. 566·8 SHOWN.

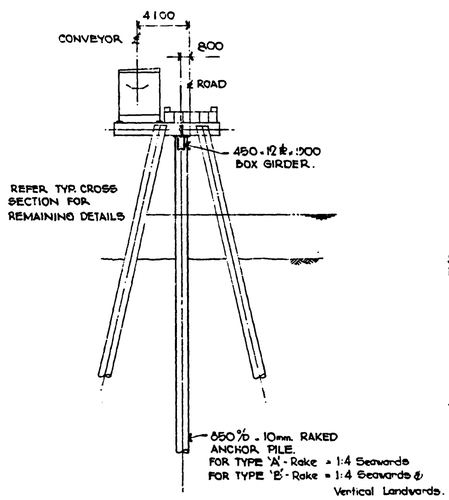

TYP. ANCHORED BENT SECTION.

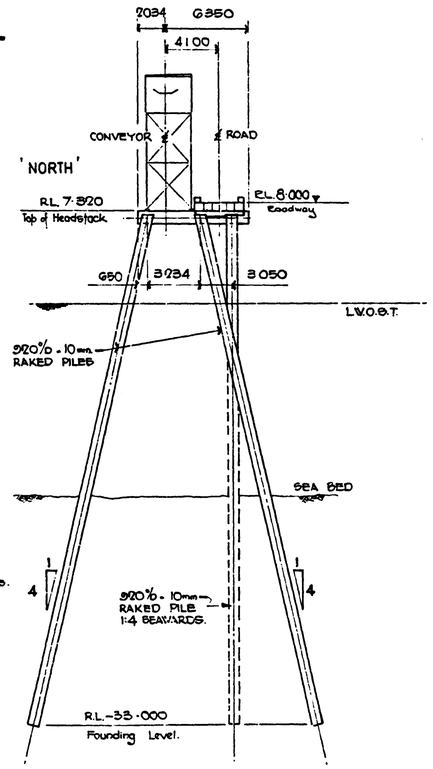

PILE BENT No 280.

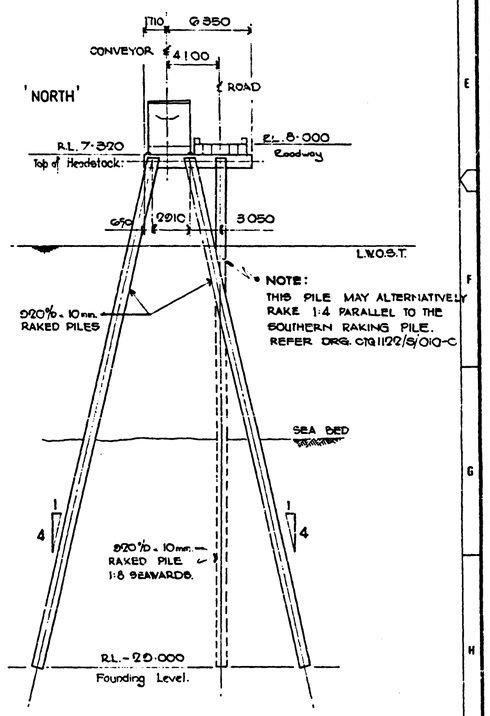

SECTION A-A

TYPICAL FOR PILE BENT No's 275, 276, 277, 278, 279.

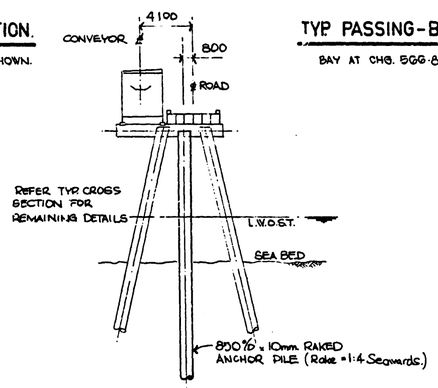

TYP. EXPANSION JOINT BENT SECTION

NOTES:

- FOR PILE SIZES, FOUNDING LEVELS & SEA BED LEVELS - REFER DRG. No CTQ 1122/S/002
- ROADWAY LEVEL FROM PILE BENT No 1 TO PILE BENT No 281 TO BE R.L. 8·000. FROM PILE BENT No 282 SEAWARDS, ROADWAY LEVEL TO BE R.L. 7·700.
- PILE BENT No 284 (Not drawn for clarity) IS LOCATED 18 METRES SEAWARD (EAST) OF PILE BENT No 283.

THE CORPORATION OF THE TREASURER OF QUEENSLAND

No.	DATE	AMENDMENTS
A	JAN '77	℄ CONV. TO ℄ ROADWAY AMENDED
B	1·2·77	TYP. CROSS-SECTION HEADSTOCK LENGTH AMENDED.
C	10·3·77	Passing Bay Pile spacing amended to suit Contractor's Construction Method.
D	18·11·77	P.B. 280 & 275-279 AMENDED. TO SUIT CONTRACTOR'S CONSTRUCTION METHOD.

C S R REFERENCE No.

THE SUGAR BOARD
BULK SUGAR TERMINALS

SCALES 1:200 U.N.
DRAWN J.T.
PASSED
DATE 12·7·76

B.S.T. LUCINDA - STAGE III
APPROACH JETTY.
GENERAL PLAN & SECTIONS.

DRAWING No. CTQ 1122/S/001 D

MACDONALD WAGNER & PRIDDLE PTY. LTD.
CONSULTING ENGINEERS 213 ST PAUL'S TERRACE FORTITUDE VALLEY, QLD 4006 PH 52 7133
IN ASSOCIATION WITH
C S R LIMITED

Docusign Envelope ID: EFC52467-A2A0-4DE2-91D5-216F30602930

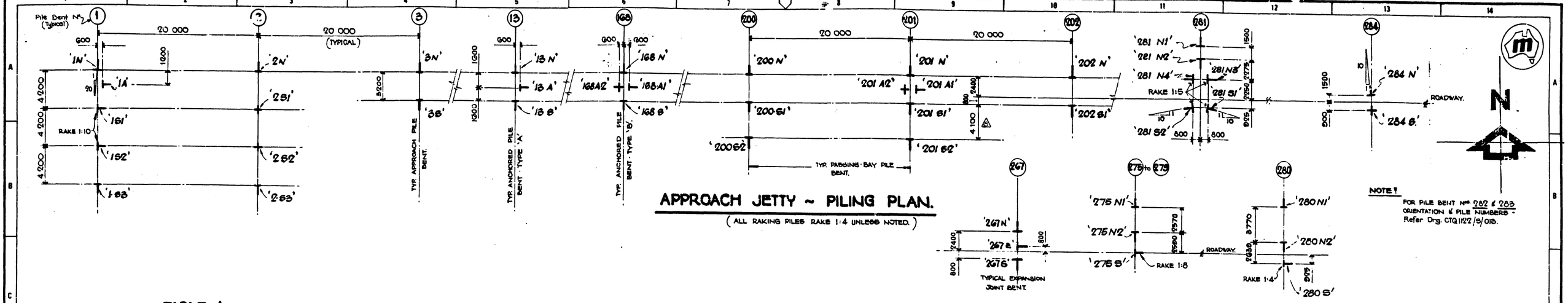

APPROACH JETTY ~ PILING PLAN.

(ALL RAKING PILES RAKE 1:4 UNLESS NOTED.)

NOTE!
FOR PILE BENT Nos 282 & 283 ORIENTATION & PILE NUMBERS - Refer Drg. CTQ1122/S/018.

TABLE 1 – 850%D × 10mm WALL APPROACH PILES

PILE BENT No.	1 & 2	1 & 2		3, 4, 5, 6 & 7	8 – 19	20 – 31	32 – 43.	44 – 55	56 – 67	68 – 79	80 – 91	92 – 103.	104 – 113	116 – 127.
PILE No.	1N, 2N, 1S3, 2S3.	1S1, 1S2.	2S1, 2S2.	3N, 4N, 5N, 6N, 7N.	8N, 9N, 10N, 11N, 12N, 13N, 14N, 15N, 16N, 17N, 18N.	19N; 20N; 21N; 22N; 23N; 24N; 31N; 25N; 26N, 27N, 28N, 29N, 30N.	32N; 33N; 34N; 35N; 36N; 37N; 38N; 39N; 40N; 41N; 42N; 43N.	44N; 45N; 46N; 47N; 48N; 49N; 50N; 51N; 52N; 53N; 54N; 55N.	56N; 57N; 58N; 59N; 60N; 61N; 62N; 63N; 64N; 65N; 66N; 67N.	68N. 69N; 70N; 71N; 72N; 73N; 74N; 75N; 76N; 77N; 78N; 79N.	80N. 81N; 82N; 83N; 84N; 85N; 86N; 87N; 88N; 89N; 90N; 91N.	92N, 93N; 94N; 95N; 96N; 97N; 98N; 99N; 100N; 101N; 102N; 103N.	104N, 105N, 106N, 107N, 108N, 109N, 110N, 111N, 112N, 113N, 114N, 115 N.	116N, 117N, 118N, 119N, 120N, 121N, 122N, 123N, 124N, 125N, 126N, 127 N.
				3S, 4S, 5S, 6S, 7S.	8S, 9S, 10S, 11S, 12S, 13S, 14S, 15S, 16S, 17S, 18S, 19S.	20S; 21S; 22S; 23S; 24S; 25S; 26S; 27S; 28S; 29S; 30S; 31S.	32S; 33S; 34S; 35S; 36S; 37S; 38S; 39S; 40S; 41S; 42S; 43S.	44S; 45S; 46S; 47S; 48S; 49S; 50S; 51S; 52S; 53S; 54S; 55S.	56S; 57S; 58S; 59S; 60S; 61S; 62S; 63S; 64S; 65S; 66S; 67S.	68S; 69S; 70S; 71S; 72S; 73S; 74S; 75S; 76S; 77S; 78S; 79S.	80S; 81S; 82S; 83S; 84S; 85S; 86S; 87S; 88S; 89S; 90S; 91S.	92S; 93S; 94S; 95S; 96S; 97S; 98S; 99S; 100S; 101S; 102S; 103S.	104S, 105S, 106S, 107S, 108S, 109S, 110S, 111S, 112S, 113S, 114S, 115S.	116S, 117S, 118S, 119S, 120S, 121S, 122S, 123S, 124S, 125S, 126S, 127S.
CHAINAGE (Metres)	86G·4 to 10G·8	86G·4 to 10G·8		12G·8 to 20G·8.	22G·8 to 44G·6	46G·8 to 68G·8	70G·8 to 92G·8	94G·8 to 116G·8	118G·8 to 140G·8	142G·8 to 164G·8	166G·8 to 188G·8	190G·8 to 212G·8	214G·8 to 236G·8	238G·8 to 260G·8
PROVISIONAL TOE R.L.	-28·000	-28·000		-24·000	-24·500	-22·000	-24·500	-22·000	-22·000	-22·500	-24·000	-27·000	-24·500	-22·000
PROVISIONAL LENGTH.	36·140	35·240	35·060	32·020	32·530	29·060	32·530	29·060	29·060	30·470	32·020	35·110	32·530	29·060
BED LEVEL. (APPROX)	-2·000	-2·000		-2·750	-3·500	-5·500	-7·500	-8·500	-8·000	-7·750	-7·000	-6·000	-5·000	-4·000

TABLE 1 – 850% × 10mm WALL APPROACH PILES.

PILE BENT No.	128 – 139	140 – 151	152 – 163	164 – 173	174 – 181	182 – 189	190 – 197	198 – 205	206 – 213	214 – 221	222 – 231	232 – 243	244 – 252
PILE No.	128N, 129N, 130N, 131N, 132N, 133N, 134N, 135N, 136N, 137N, 138N, 139N, 1289, 1299, 1309, 1319, 1329, 1339, 1349, 1359, 1369, 1379, 1389, 1399.	140N, 141N, 142N, 143N, 144 N, 145N, 146N, 147N, 148N, 149N, 150N, 151 N, 1409, 1419, 1429, 1439, 1449, 1459.	152N, 153N, 154N, 155N, 156N, 157N, 158N, 159N, 160N, 161N, 162N, 163N, 1519, 1529, 1539, 1549, 1559, 15691, 15791, 15891, 1599, 1609, 1619, 1629, 1639.	164N, 165N, 166N, 167N, 168N, 169N, 170N, 171N, 172N, 173N. 1649, 1659, 1669, 1679, 1689, 1699, 1709, 1719, 1729, 1739.	174N, 175N, 176N, 177N, 178N, 179N, 180 N, 181N. 1749, 1759, 1769, 1779, 1789, 1799, 1809, 1819.	182N, 183N, 184 N, 185N, 186N, 187N, 188N, 189N. 1829, 1839, 1849, 1859, 1869, 1879, 1889, 1899.	190N, 191N, 192 N, 193N, 194 N, 195N, 196N, 197 N. 1909, 1919, 1929, 1939, 1949, 1959, 1969, 1979.	198N, 199 N, 200 N, 201N, 202 N, 203 N, 204 N, 205N. 1989, 1999, 2009, 20181, 20291, 2039, 2049, 2059.	206N, 207N, 208N, 209N, 210N, 211N, 212N, 213N. 2069, 2079, 2089, 2099, 2109, 2119, 2129, 2139.	214N, 215N, 216N, 217N, 218N, 219N, 220N, 221 N. 2149, 2159, 2169, 2179, 2189, 2199, 2209, 221 S.	222N, 223N, 224N, 225N, 226N, 227N, 228N, 229N, 230N, 231N. 2229, 2239, 2249, 2259, 2269, 2279, 2289, 2299.	232N, 233N, 234 N, 235N, 236N, 237N, 238N, 239N, 240N, 241N, 242N, 243N. 2329, 2339, 2349, 2359, 2369, 2379, 2389, 2399, 2409, 2419, 2429, 2439.	244N, 245N, 246N, 247N, 248N, 249N, 250N, 251 N, 252N. 2449, 2459, 2469, 2479, 24891, 25091, 2519, 2529.
CHAINAGE (Metres)	262G·8 to 284G·8	286G·8 to 308G·8	310G·8 to 332G·8	334G·8 to 356G·8	354G·8 to 368G·8	370G·8 to 384G·8	388G·8 to 400G·8	402G·8 to 416G·8	418G·8 to 432G·8	434G·8 to 448G·8	450G·8 to 468G·8	470G·8 to 492G·8	494G·8 to 510G·8
PROVISIONAL TOE R.L.	-25·000	-26·000	-24·000	-24·600	-23·000	-25·000	-25·000	-25·500	-29·000	-24·500	-29·500	-29·500	-24·500
PROVISIONAL LENGTH.	33·050	34·080	32·020	32·640	31·000	33·050	33·050	33·570	37·180	32·530	37·080	33·570	32·530
BED LEVEL. (APPROX)	-3·500	-2·500	-2·000	-1·500	-1·000	-0·500	-0·500	-1·500	-2·500	-3·000	-4·250	-5·500	-7·250

TABLE 2 – 920% × 10mm WALL APPROACH PILES.

PILE BENT No.	253 – 255.	256 – 267.	268 – 274	275 – 280	275 – 279	281	281	282, 283.	282, 283	281, 282, 283		280	284	284
PILE No.	253 N, 254 N, 255 N. 2558, 2548, 2558.	256N, 257N, 258N, 259N, 260N, 261N, 262N, 263N – 267N. 2568, 2578, 2588, 2598, 2608, 2618, 2628, 2638, 2648, 2658, 2668, 2678.	268N, 269N, 270 N, 271 N, 272 N, 273 N, 274 N. 2688, 2698, 2708, 2718, 2728, 2738, 2748.	275N1 – 280N1. 275N2 – 280N2.	2755; 2765; 2775, 2785; 2795:	281N1 281N2 281N3 281N4		282N1, 282N2, 282N3, 282N4 283N1, 283N2, 283N3, 283N4	282N5, 283N5 282N6, 283N6	281S1, 282S1, 283S1 281S2 282S2, 283S2		280S	284 N 284S	284 284S
CHAINAGE (Metres)	512G·8 to 516G·8	518G·8 to 540G·8	542G·8 to 554G·8	556G·8 to 566G·8	556G·8 to 564G·8	568G·8	568G·8	570G·8 & 572G·8	570G·8 & 572G·8	568G·8 to 572G·8		566G·8	574·8	574·8
PROVISIONAL TOE R.L.	-24·700	-26·100	-30·500	-31·000	-31·000	-33·000	-33·000	-33·000	-33·000	-33·000		-31·000	-33·000	-33·000
PROVISIONAL LENGTH	32·740	34·180	38·720	30·030	38·160	41·100	40·470	41·090	40·650	40·040	40·650	39·030	41·090	39·860
BED LEVEL (APPROX)	-9·500	-11·500	-12·500	-13·500	-13·500	-13·500	-13·500	-13·500	-13·500	-13·500		-13·500	-13·500	-13·500
HEAD R.L.	7·058	7·058	7·058	6·858	6·858	6·858	6·258	6·858	6·858	6·258	6·858	6·858	6·858	6·858

TABLE 3 – ANCHOR PILES. 850% × 10mm WALL (UNLESS NOTED)

920%D × 10mm WALL ANCHOR PILES.

PILE BENT No.	1	13	25	37	49	61	73	85	97	109	121	133	145	157	168	177	185	193	201	209	217	226	237	249	261	274
PILE No.	1A	13A	25A	37 A	49 A	61 A	73A	85A	97A	109A	121 A	133A	145A	157A	168A2, 168A1.	177A2, 177A1.	185A2, 185A1.	193A2, 193A1.	201A2, 201 A1.	209A2, 209A1	217A2, 217A1.	226A2, 226A1	237A2, 237A1.	249A2, 249A1	261A2, 261A1	274A2, 274A1.
CHAINAGE (Metres)	87·4	327·4	567·4	807·4	1047·4	1287·4	1527·4	1767·4	2007·4	2247·4	2487·4	2727·4	2967·4	3207·4	3426·2, 3427·4	3666·2, 3667·4	3786·2, 3787·4	3926·2, 3927·4	4086·2, 4087·4	4246·2, 4247·4	4406·2, 4407·4	4586·2, 4587·4	4806·2, 4807·4	5046·2, 5047·4	5286·2, 5287·4	5546·2, 5547·4
PROVISIONAL TOE R.L.	-28·000	-24·500	-22·000	-24·500	-22·000	-22·000	-22·500	-24·000	-27·000	-24·500	-22·000	-25·000	-26·000	-24·000	-24·600	-23·000	-25·000	-25·000	-25·500	-29·000	-24·500	-29·500	-25·500	-24·500	-26·100	-30·500
PROVISIONAL LENGTH	35·320	31·710	29·130	31·710	29·130	29·130	29·060	31·190	34·282	31·710	29·130	32·220	33·260	31·190	30·860 31·810	29·260 30·190	31·260 32·220	31·260 32·220	31·760 32·740	35·260 36·350	30·760 31·710	35·760 36·860	31·760 32·740	30·760 31·710	37·360 38·360	35·760 37·860
BED LEVEL. (APPROX)	-2·000	-3·500	-5·500	-7·500	-8·500	-8·000	-7·750	-7·000	-6·000	-5·000	-4·000	-3·500	-2·500	-2·000	-1·500	-1·000	-0·500	-0·500	-1·500	-2·500	-3·000	-4·250	-5·500	-7·250	-11·500	-12·500

TABLE 4 – PASSING BAY PILES. 850%D × 10mm WALL.

PILE BENT No.	24, 25.	60, 61	108, 109.	156, 157.	200, 201.	248, 249.
PILE No.	2452, 2552.	6052, 6152	10852, 10952.	15652, 15752.	20052, 20152.	24852, 24952.
CHAINAGE (Metres)	546·8 to 566·8	1206·8 to 1226·8	2726·8 to 2746·8	3186·8 to 3206·8	4066·8 to 4086·8	5026·8 to 5046·8
PROVISIONAL TOE R.L.	-22·000	-22,000	-24·500	-24·000	-25·500	-24·500
PROVISIONAL LENGTH	29·060	29·060	32·530	32·020	33·570	32·580
BED LEVEL. (APPROX)	-5·500	-6,800	-5·000	-2·000	-1·500	-7·250

TABLE 5 – EXPANSION JOINT ANCHOR PILES. 850% × 10mm WALL.

PILE BENT No.	7	19	31	43	55	67	79	91	103	115	127	139	151	163	173	181	189	197	205	213	221	231	243	255	267
PROVISIONAL TOE R.L.	-24·000	-24·500	-22·000	-24·500	-22·000	-22·000	-22·500	-24·000	-27·000	-24·500	-22·000	-25·000	-26·000	-24·000	-24·600	-23·000	-25·000	-25·000	-25·500	-29·000	-24·500	-29·500	-25·500	-24·700	-26·100
PROVISIONAL LENGTH	31·870	32·480	29·910	32·480	29·910	29·910	30·420	31·870	35·060	32·480	29·910	33·000	34·030	31·870	32·590	30·040	33·000	33·000	33·510	37·120	32·480	37·640	33·510	32·690	34·130

SUMMARY

GROUP	TOTAL LENGTH.
TABLE 1	16 550 metres
TABLE 2	3 235 metres
TABLE 3	1 227 metres
TABLE 4	381 metres
TABLE 5	816 metres.
TOTAL LENGTH 850%D PILES.	18 860 metres.
TOTAL LENGTH 920%D PILES.	3 385 metres.

NOTES:

1. Pile Head R.L. for all piles to be R.L.7·058 unless noted.
2. Anchor Pile Head R.L. to be R.L. 6·258.
3. For Layout of Pile Bents & Anchored Bents & Passing Bays - Refer Drg. No. CTQ 1122/S/001
4. Pile Head R.L. for Expansion Joint Anchor piles to be R.L. 7·008.

THE CORPORATION OF THE TREASURER OF QUEENSLAND

No.	DATE	AMENDMENTS
A	16·2·77	HEADSTOCK LEVEL RAISED FOR CONC. ROAD. DESIGN
B	20·10·77	PASSING BAY PILES AMENDED.

C.S.R REFERENCE No.

THE SUGAR BOARD
BULK SUGAR TERMINALS

SCALES 1:200
DRAWN J.T.
PASSED
DATE 22·7·76.

B.S.T. LUCINDA STAGE III
APPROACH JETTY
PILE SCHEDULE

DRAWING No. CTQ 1122/S/002 B

MACDONALD WAGNER & PRIDDLE PTY. LTD.
CONSULTING ENGINEERS 210 ST PAULS TERRACE FORTITUDE VALLEY QLD 4006 PH 52 7122
IN ASSOCIATION WITH
CSR LIMITED

Docusign Envelope ID: EFC52467-A2A0-4DE2-91D5-216F30602930

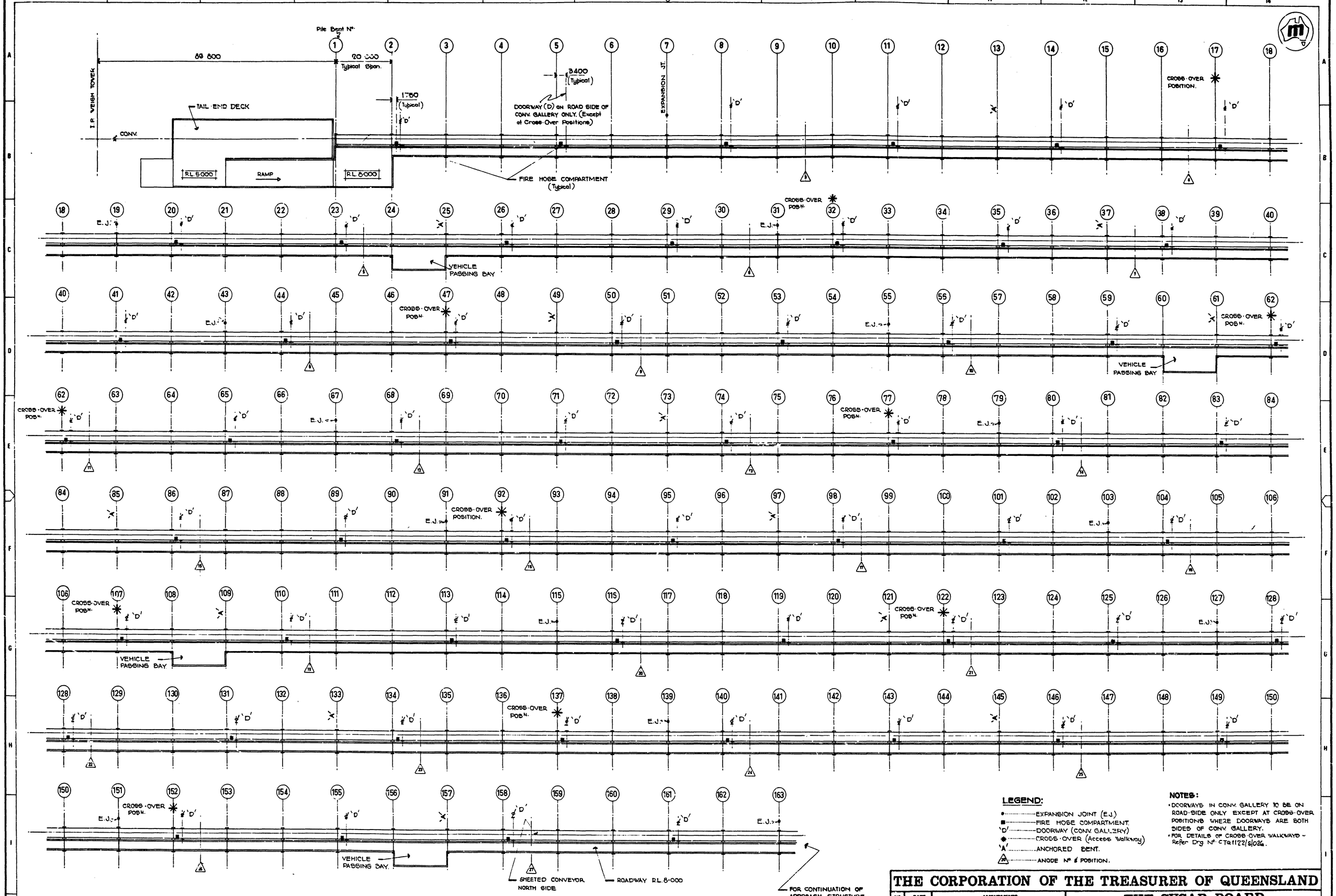

LEGEND:

- ●.....EXPANSION JOINT (E.J.)
- ■.....FIRE HOSE COMPARTMENT.
- 'D'.....DOORWAY (CONV. GALLERY)
- ✱.....CROSS-OVER (Access Walkway)
- 'A'.....ANCHORED BENT.
- △.....ANODE Nº & POSITION.

NOTES:

- DOORWAYS IN CONV. GALLERY TO BE ON ROAD-SIDE ONLY EXCEPT AT CROSS-OVER POSITIONS WHERE DOORWAYS ARE BOTH SIDES OF CONV. GALLERY.
- FOR DETAILS OF CROSS-OVER WALKWAYS - Refer Drg. Nº CTQ1122/S/024.

NOTES:

- FOR DETAILS OF EXPANSION JOINTS REFER DRGS No. CTQ1122/S/006. /017.
- EXPANSION JOINTS HAVE BEEN DESIGNED FOR 22°C VARIATION IN TEMPERATURE AND TO ACCOMMODATE ± 37 mm MOVEMENT AT JOINTS.
- WELDING OF ROADWAY GIRDER LEGS TO HEADSTOCK SHALL NOT BE PERMITTED WHEN AMBIENT TEMPERATURE IS BELOW 13°C.

THE CORPORATION OF THE TREASURER OF QUEENSLAND

Nº	DATE	AMENDMENTS

C S R REFERENCE Nº.

THE SUGAR BOARD
BULK SUGAR TERMINALS

SCALES 1:500
DRAWN J.T.
PASSED
DATE 28·9·76

B.S.T. LUCINDA - STAGE III
APPROACH JETTY. - SHEET 1.
SUPERSTRUCTURE LAYOUT.

DRAWING Nº CTQ1122/S/003

MACDONALD WAGNER & PRIDDLE PTY. LTD.
CONSULTING ENGINEERS 213 ST PAUL'S TERRACE, FORTITUDE VALLEY QLD 4006 PH 52 7122
IN ASSOCIATION WITH
CSR LIMITED

Docusign Envelope ID: EFC52467-A2A0-4DE2-91D5-216F30602930

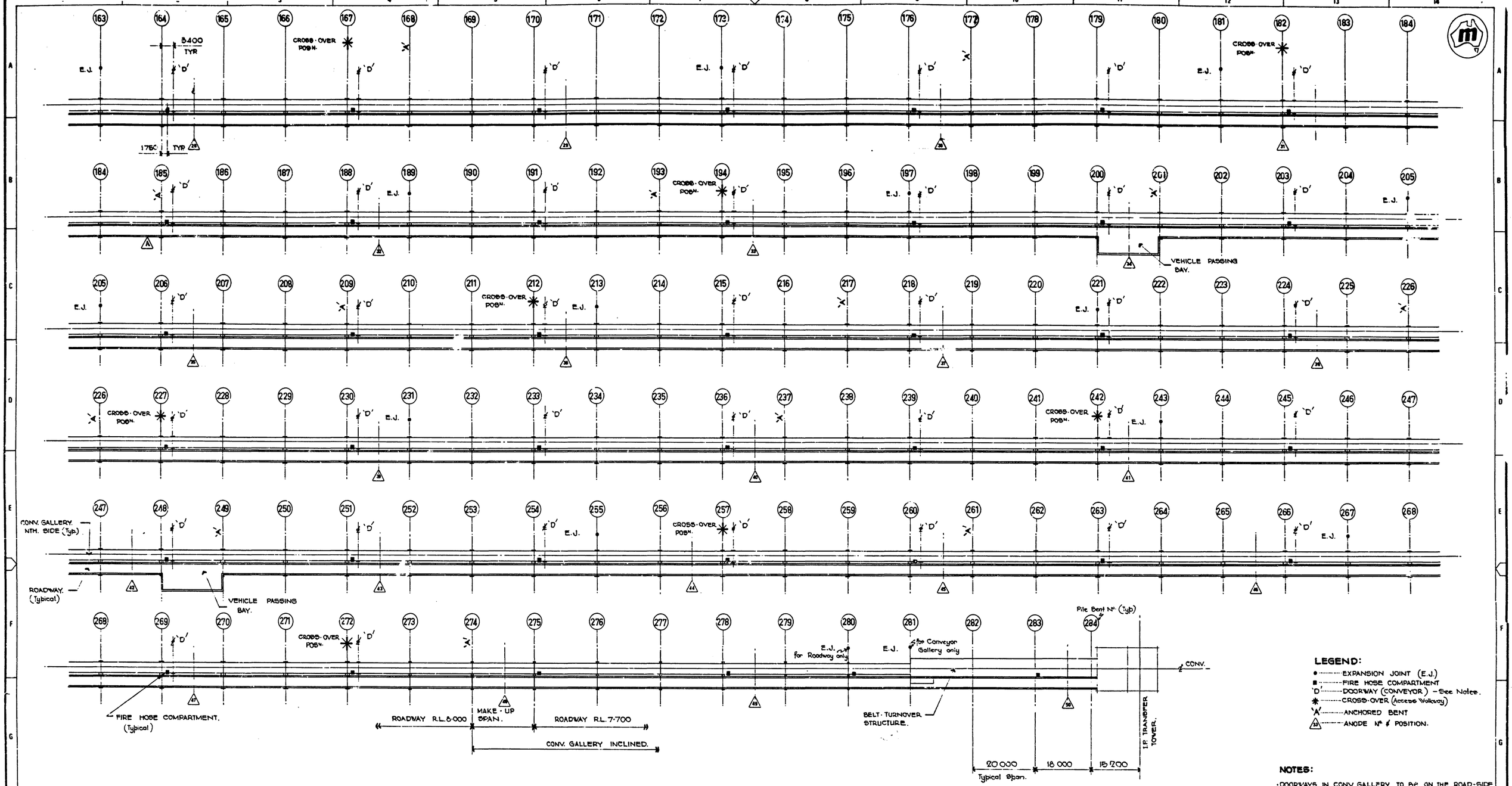

LEGEND:

- ● ..... EXPANSION JOINT (E.J.)
- ■ ..... FIRE HOSE COMPARTMENT
- 'D' ..... DOORWAY (CONVEYOR) – See Note.
- ✱ ..... CROSS-OVER (Access Walkway)
- 'A' ..... ANCHORED BENT
- △ ..... ANODE No & POSITION.

NOTES:

- DOORWAYS IN CONV. GALLERY TO BE ON THE ROAD-SIDE ONLY EXCEPT AT CROSS-OVER POSITIONS WHERE DOORWAYS ARE BOTH SIDES OF CONV. GALLERY.
- FOR CONTINUATION OF APPROACH STRUCTURE - REFER SHEET 1.
- FOR DETAILS OF CROSS-OVER WALKWAYS - REFER DRG No. CTQ1122/S/026 (ALL CROSS-OVER POSITIONS ARE SEAWARD OF THE MARKED PILE BENT.)
- FOR DETAILS OF EXPANSION JOINTS REFER DRGS No. CTQ1122/S/006 & CTQ1122/S/017.

THE CORPORATION OF THE TREASURER OF QUEENSLAND

No.	DATE	AMENDMENTS
A	29.11.76	FIRE HOSE COMPARTMENT ADDED AT BENT '185'.

CSR REFERENCE No.

THE SUGAR BOARD
BULK SUGAR TERMINALS

SCALES 1:500
DRAWN J.T.
PASSED
DATE 28.8.76

B.S.T. LUCINDA STAGE III
APPROACH JETTY. – SHEET 2.
SUPERSTRUCTURE LAYOUT.

DRAWING No. CTQ1122/S/004 A

MACDONALD WAGNER & PRIDDLE PTY. LTD.
CONSULTING ENGINEERS 213 ST. PAUL'S TERRACE, FORTITUDE VALLEY QLD 4006 PH 52 7133.
IN ASSOCIATION WITH
CSR LIMITED

Docusign Envelope ID: EFC52467-A2A0-4DE2-91D5-216F30602930

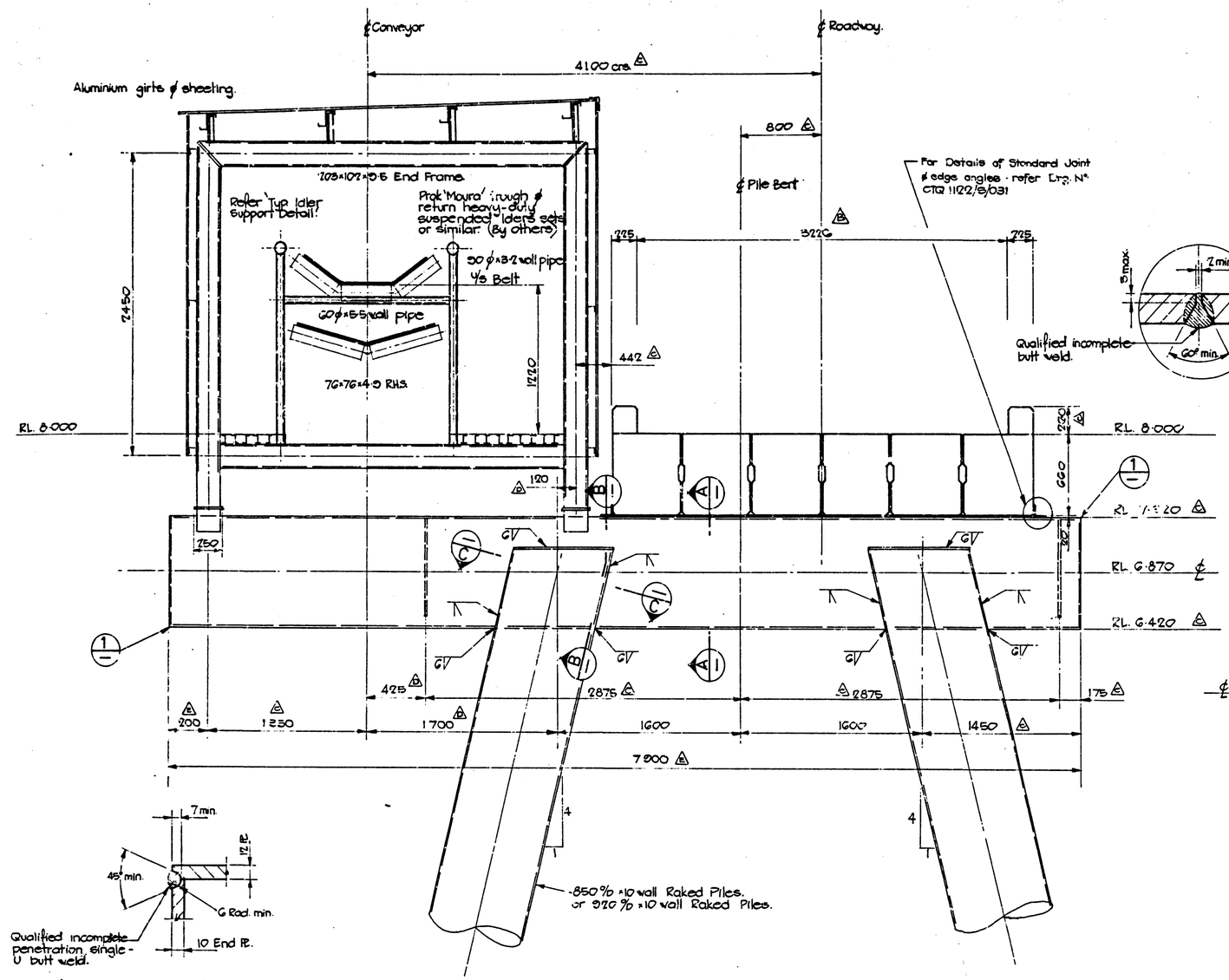

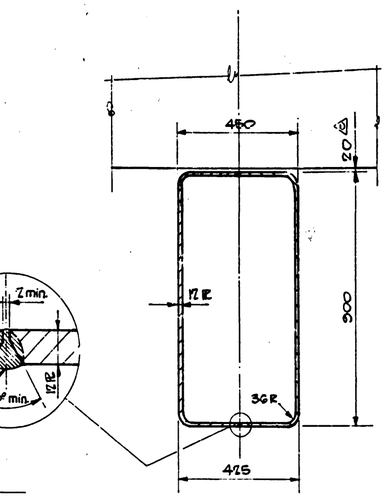

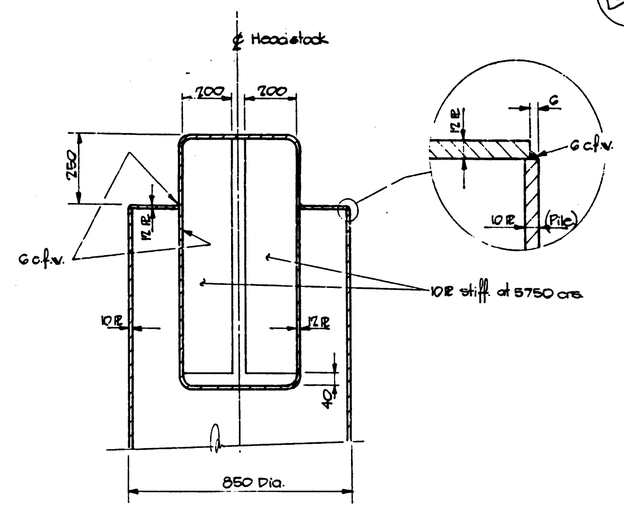

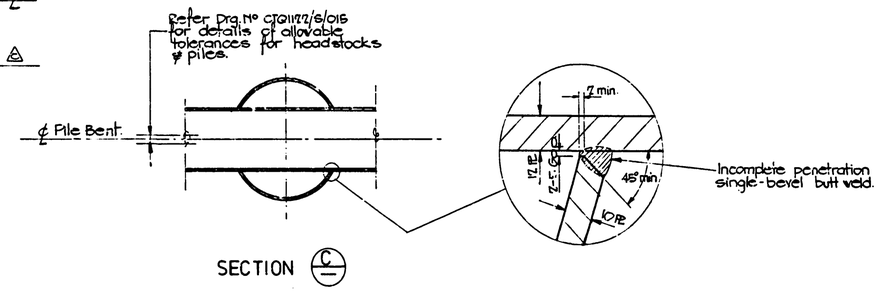

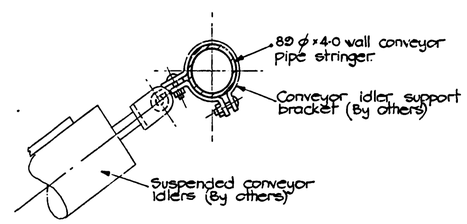

TYP. IDLER SUPPORT DETAIL.

THE CORPORATION OF THE TREASURER OF QUEENSLAND

No	DATE	AMENDMENTS
A	20-12-76	Roadway construction altered.
B	4-1-77	Dimension changed.
C	18-1-77	Roadway ℄ to Conveyor ℄ altered. Neoprene bearing thk. amended. Dimensions added.
D	18-1-77	Dimensions changed.
E	1-2-77	Headstock length altered to 7900

C.S.R. REFERENCE No.

THE SUGAR BOARD
BULK SUGAR TERMINALS

SCALES 1:20, 1:10
DRAWN R. Holmes
PASSED
DATE DEC. 76.

B.S.T. LUCINDA STAGE III
APPROACH JETTY
TYPICAL CROSS-SECTION.

DRAWING No. CTQ1122/S/005 [redacted] E

MACDONALD WAGNER & PRIDDLE PTY. LTD.
CONSULTING ENGINEERS 313 ST PAUL'S TERRACE, FORTITUDE VALLEY QLD 4006 PH 52 7112
IN ASSOCIATION WITH
CSR LIMITED

Docusign Envelope ID: EFC52467-A2A0-4DE2-91D5-216F30602930

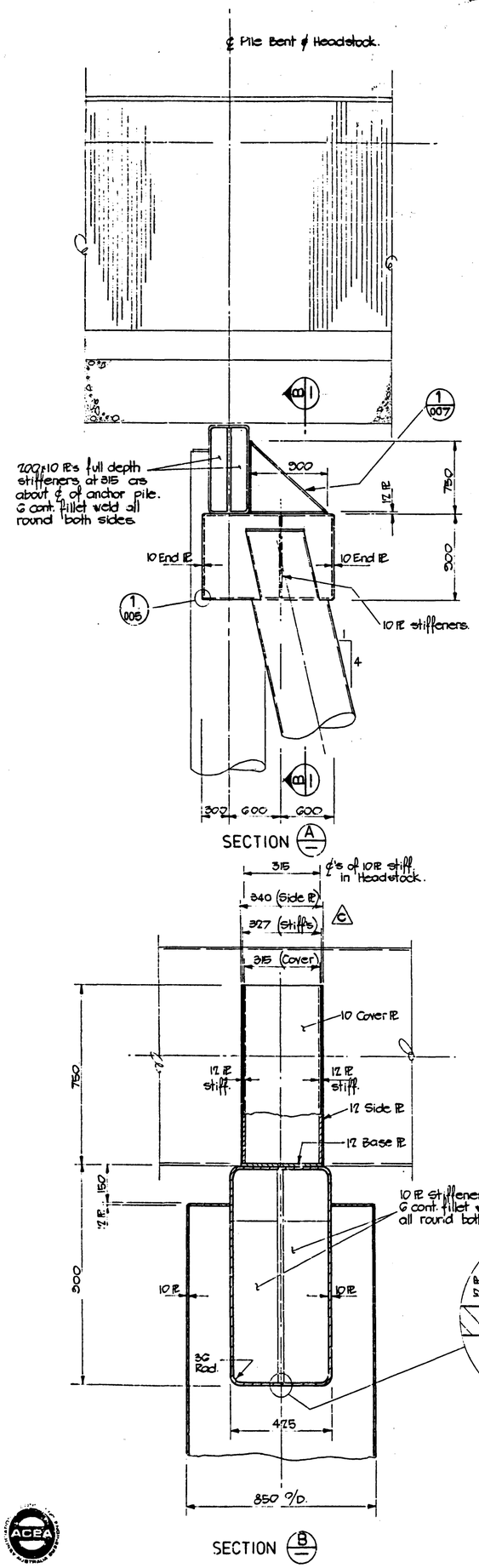

SECTION A

SECTION B

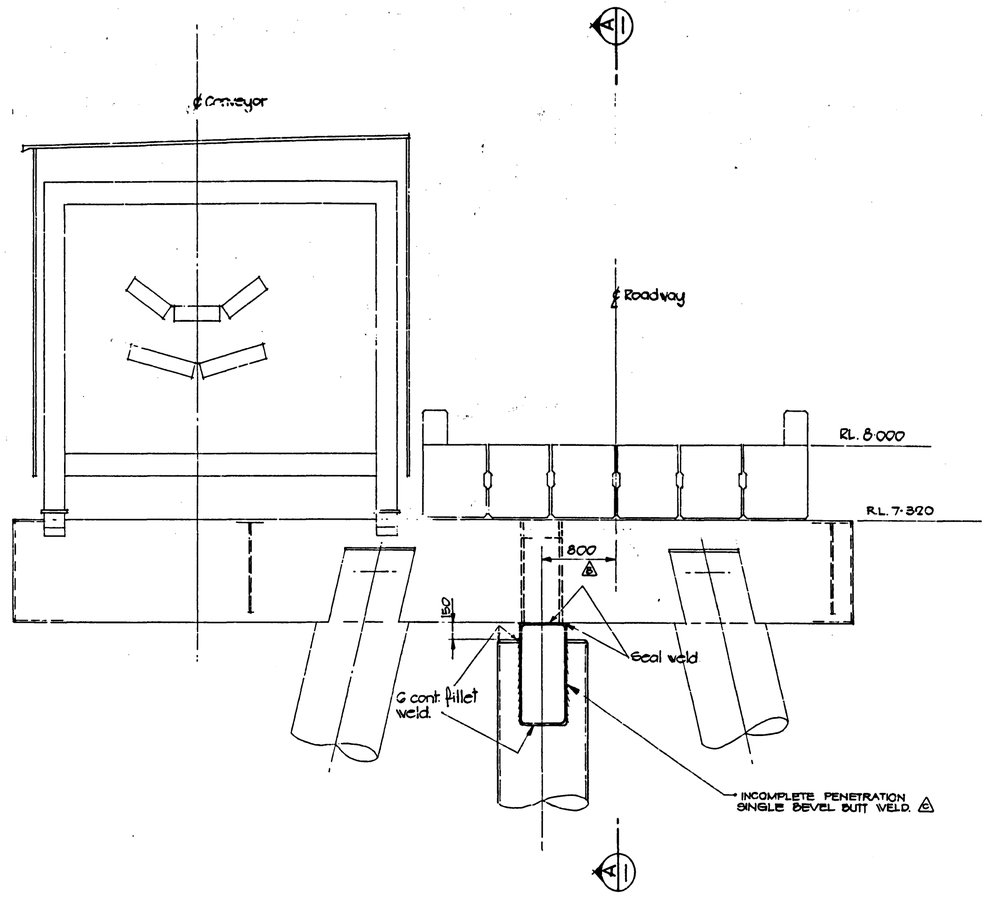

ELEVATION

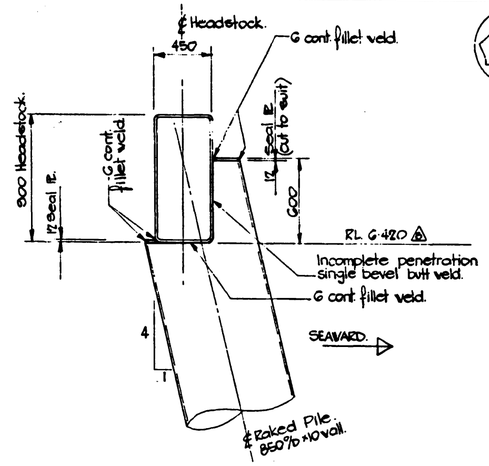

ELEVATION

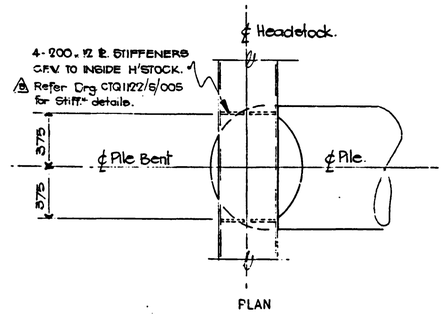

PLAN

ANCHOR PILE AT EXPANSION JOINT.

NOTE

For 'Type B' Anchored Pile Bent - Refer Drg Nº CTQ1122/S/007

For Typical Cross-Section of Approach Jetty - refer Drg. Nº CTQ1122/S/005.

THE CORPORATION OF THE TREASURER OF QUEENSLAND

Nº	DATE	AMENDMENTS
A	20·12·76	Roadway construction altered.
B	1·2·77	DIM. TO FILE ℄ FROM ROAD ℄ AMEND. RL. HEADSTOCK ⅓ AMENDED.
C	23·8·77	PLATE SIZES AMENDED.

C S R REFERENCE Nº.

THE SUGAR BOARD
BULK SUGAR TERMINALS

SCALES 1:25 1:20

DRAWN R. Holmes

PASSED

DATE DEC. '76.

B.S.T. LUCINDA STAGE III
APPROACH JETTY
TYPE 'A' TYPICAL ONE-PILE ANCHOR BENT.

DRAWING Nº. CTQ1122/S/006 C

MACDONALD WAGNER & PRIDDLE PTY. LTD.
CONSULTING ENGINEERS 213 ST PAUL'S TERRACE FORTITUDE VALLEY QLD 4006 PH 52 7122
IN ASSOCIATION WITH
CSR LIMITED

Docusign Envelope ID: EFC52467-A2A0-4DE2-91D5-216F30602930

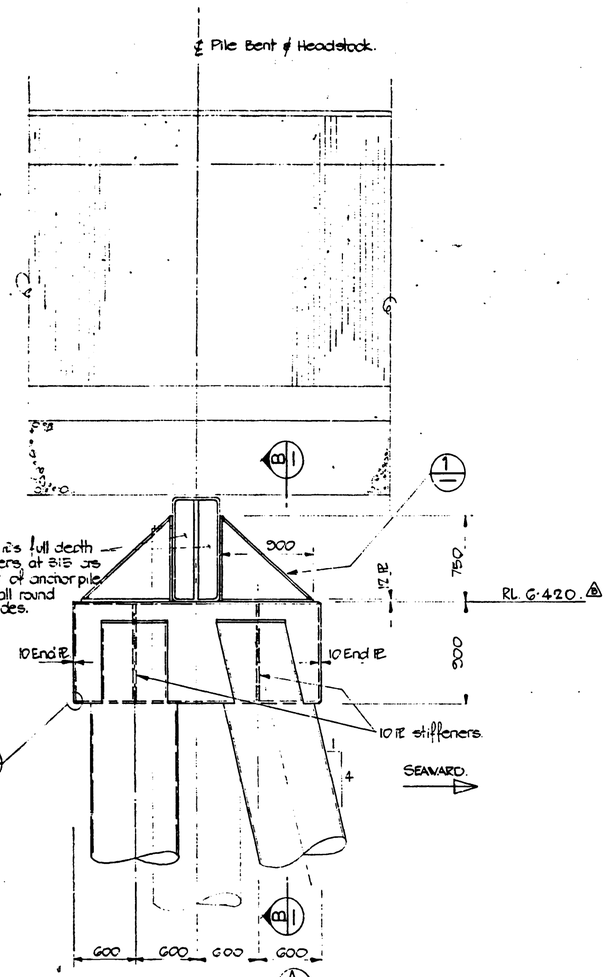

SECTION A

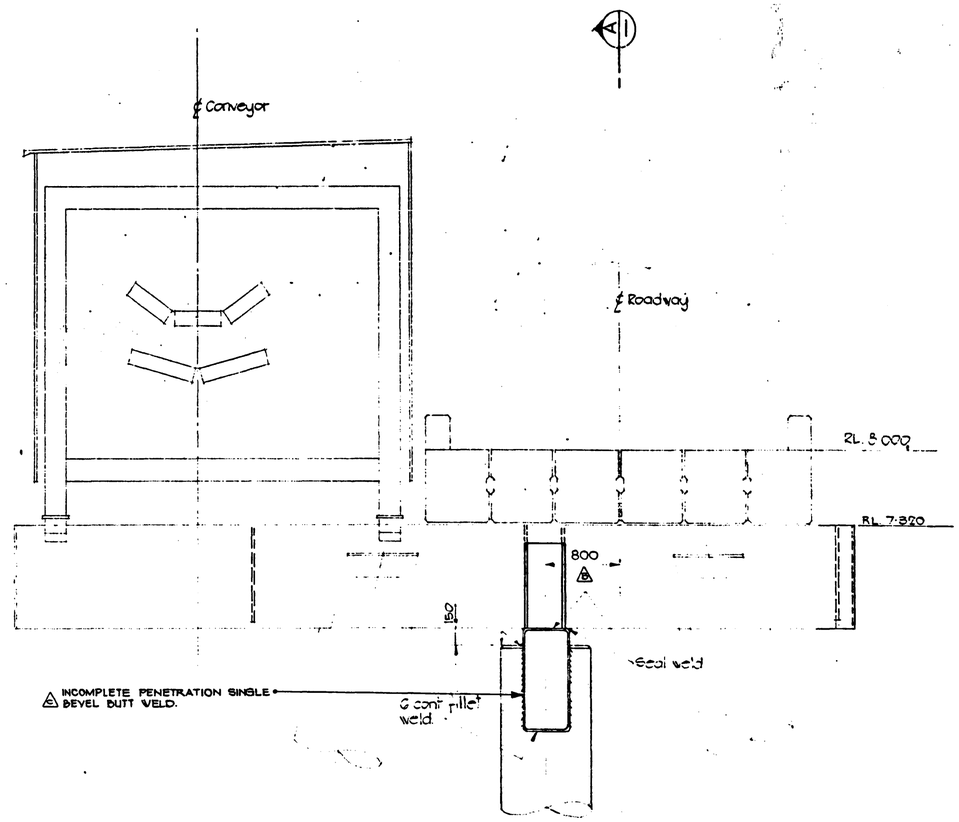

ELEVATION

℄ Raked Pile
850 ⌀ × 10 wall.
N.B. 970 ⌀ × 10 wall for pile bent
Nº 261 & 274.

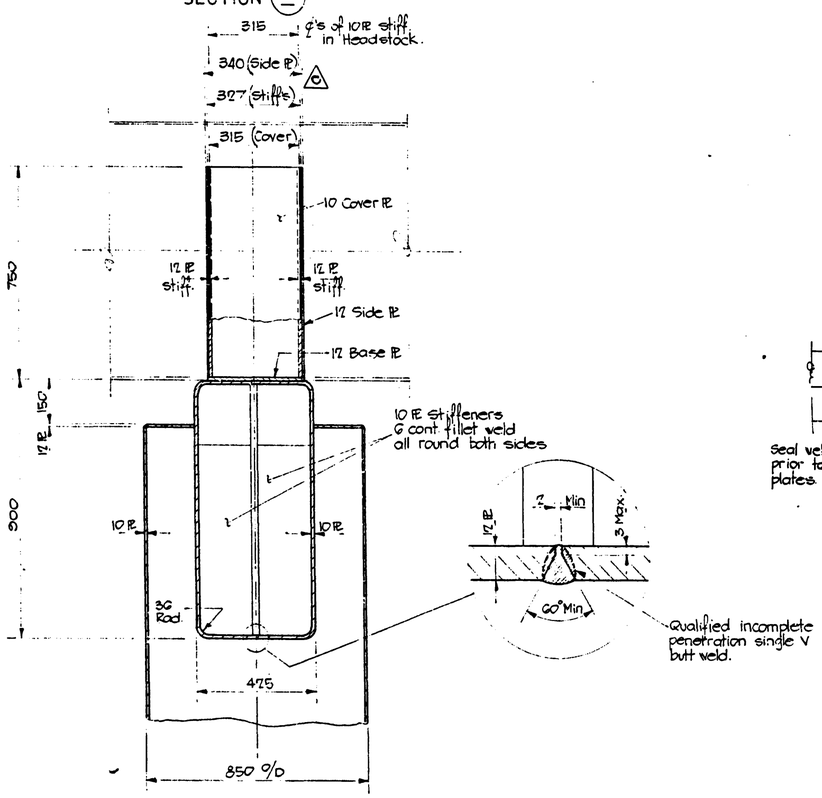

SECTION B

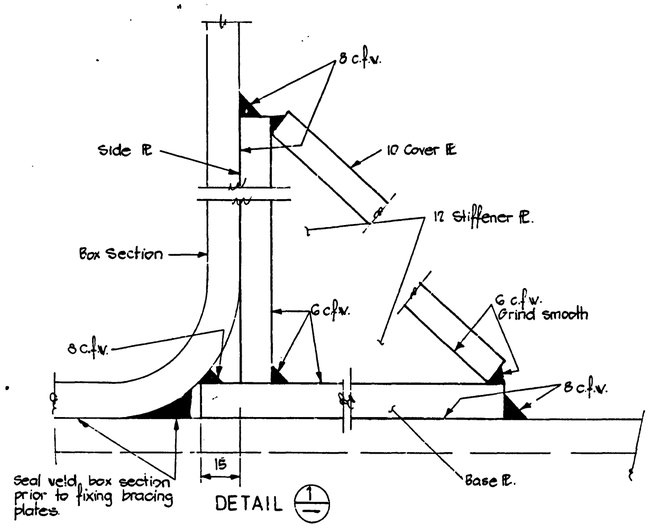

DETAIL 1

NOTE
For 'Type A' Anchor Pile Bent - Refer Drg Nº CTQ1122/S/006.
For Typical Cross Section of Approach - (850 ⌀ piles) Refer Drg. Nº CTQ1122/S/005
- (970 ⌀ ")

Nº	DATE	AMENDMENTS
A	20·12·76	Roadway construction altered.
B	1·2·77	DIM. TO PILE ℄ FROM ROAD ℄ AMENDED. R.L. AMENDED
C	28·8·77	PLATE SIZES AMENDED.

C S R REFERENCE Nº.

THE CORPORATION OF THE TREASURER OF QUEENSLAND

THE SUGAR BOARD
BULK SUGAR TERMINALS

SCALES 1:25 1:20
DRAWN R. Holmes
PASSED
DATE DEC. '76.

B.S.T. LUCINDA STAGE III
APPROACH JETTY
TYPE 'B' TYPICAL TWO-PILE ANCHOR BENT.

DRAWING Nº CTQ1122/S/007 C

MACDONALD WAGNER & PRIDDLE PTY. LTD.
CONSULTING ENGINEERS 213 ST PAUL'S TERRACE FORTITUDE VALLEY QLD 4006 PH 52 7133
IN ASSOCIATION WITH
CSR LIMITED

Docusign Envelope ID: EFC52467-A2A0-4DE2-91D5-216F30602930

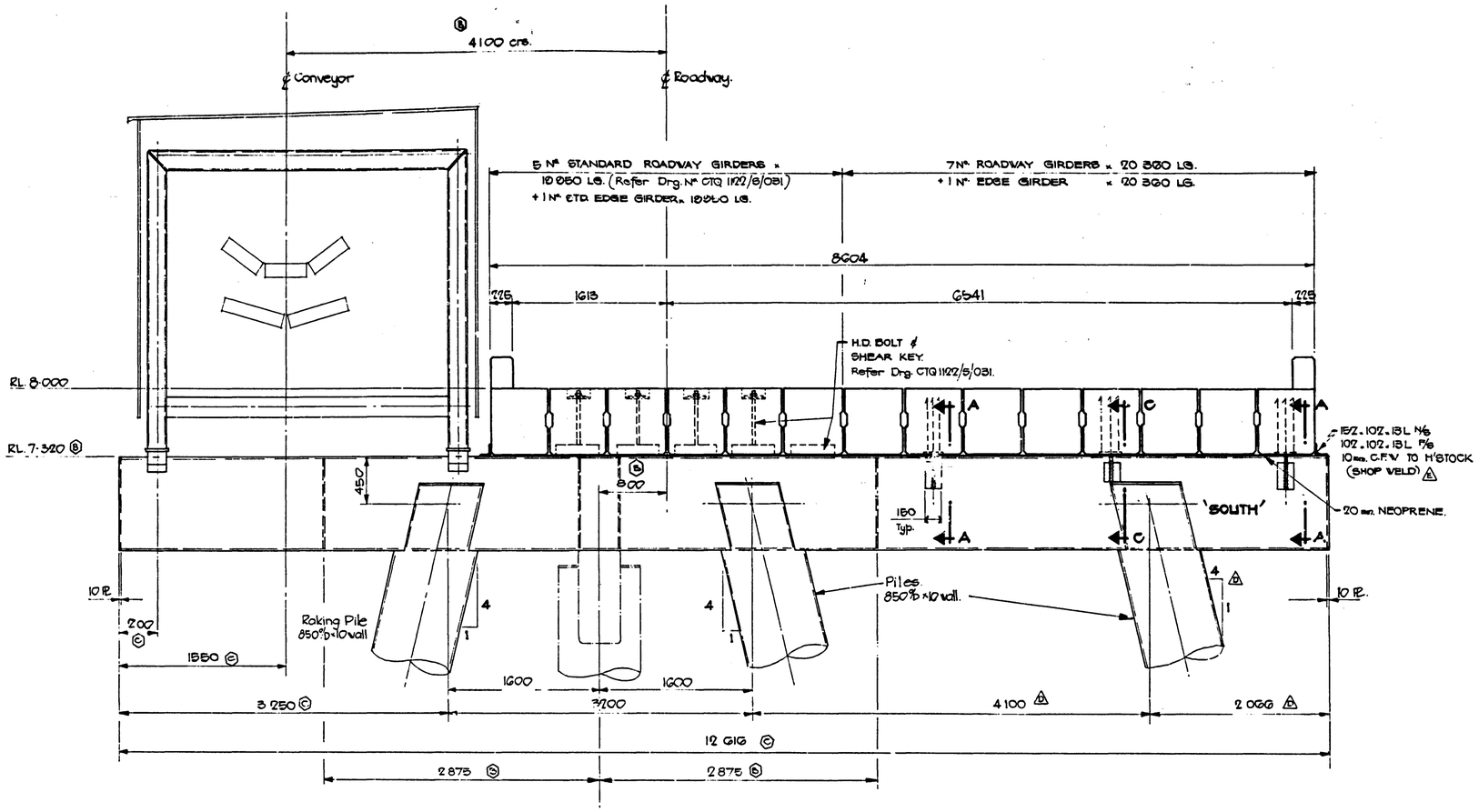

TYP. SECTION THRU. PASSING BAY

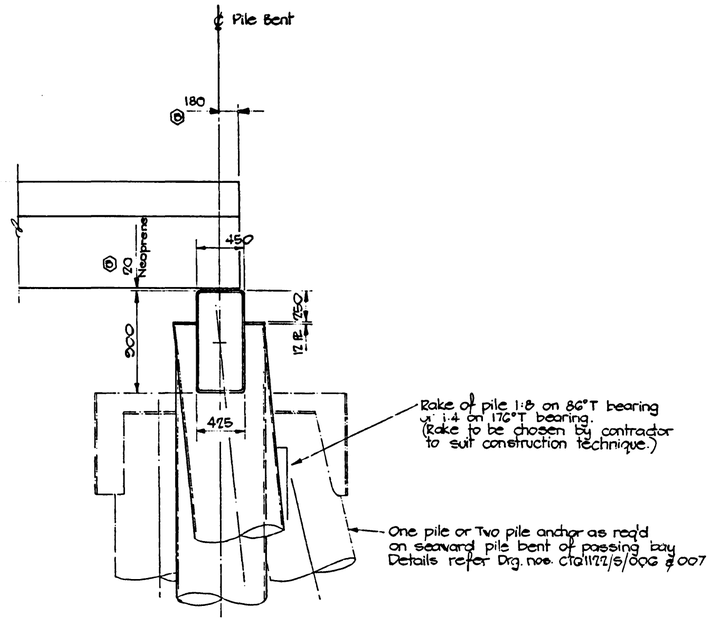

END VIEW

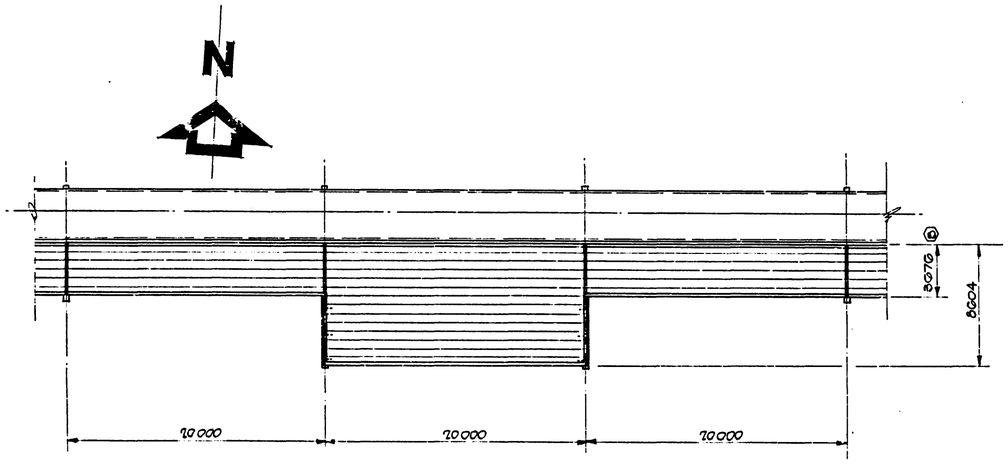

TYPICAL PASSING BAY LAYOUT.

For locations of Passing Bays refer Drg. Nº CTQ1122/S/001.

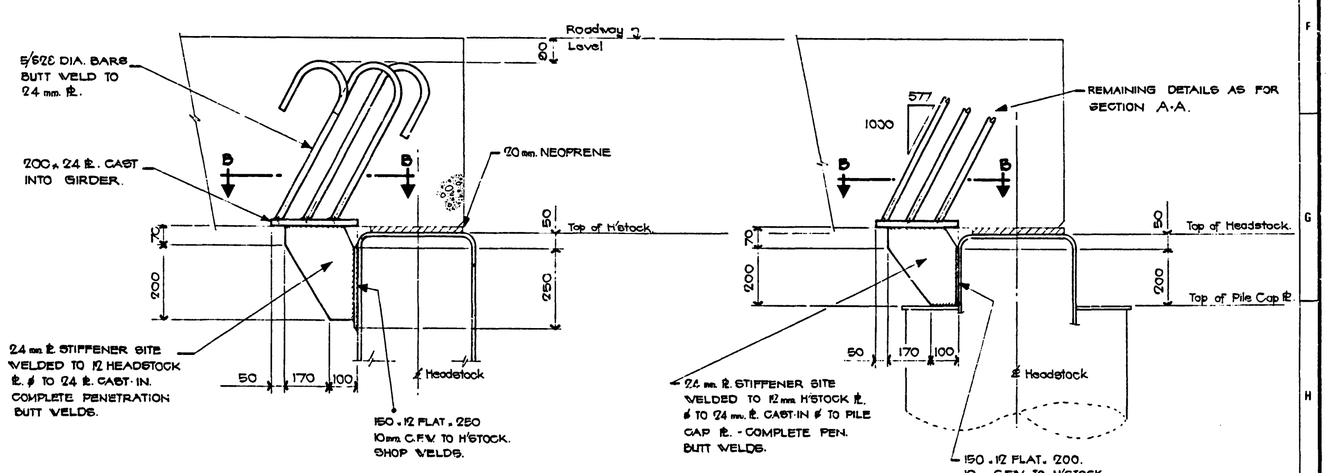

SECTION A-A

SECTION C-C

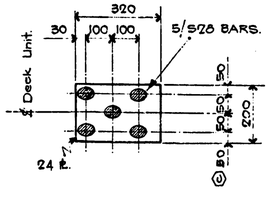

SECTION B-B

NOTES:

- THE CONTRACTOR MAY MODIFY BOX GIRDER DETAILS TO SUIT POST-TENSIONING TECHNIQUE, SUBJECT TO ENGINEERS APPROVAL.
- FOR STANDARD CONC. ROADWAY GIRDERS & STANDARD JOINT DETAILS - REFER DRG. CTQ 1122/S/031.
- FOR REMAINING HEADSTOCK & PILE DETAILS - REFER DRG. Nº CTQ 1122/S/005.

THE CORPORATION OF THE TREASURER OF QUEENSLAND

Nº	DATE	AMENDMENTS
A	20·12·76	Roadway construction altered.
B	JAN 77	Conv. & dim. to Road & amend. Deck unit hold down details added. Girder Length alt.
C	1·2·77	HEADSTOCK LENGTH ALTERED.
D	16·3·77	Pile Spacing amended to suit Contractor Construction. Methods.
E	12·9·77	Shop weld edge angles to suit Contractor

CSR REFERENCE Nº.

THE SUGAR BOARD
BULK SUGAR TERMINALS

SCALES 1:75 1:200
DRAWN R. Holmes
PASSED
DATE DEC. '76

B.S.T. LUCINDA STAGE III
APPROACH JETTY
PASSING BAY DETAILS.

DRAWING Nº CTQ1122/S/008 E

MACDONALD WAGNER & PRIDDLE PTY. LTD.
CONSULTING ENGINEERS 213 ST PAUL'S TERRACE FORTITUDE VALLEY QLD 4006 PH 52 7132
IN ASSOCIATION WITH
CSR LIMITED

Docusign Envelope ID: EFC52467-A2A0-4DE2-91D5-216F30602930

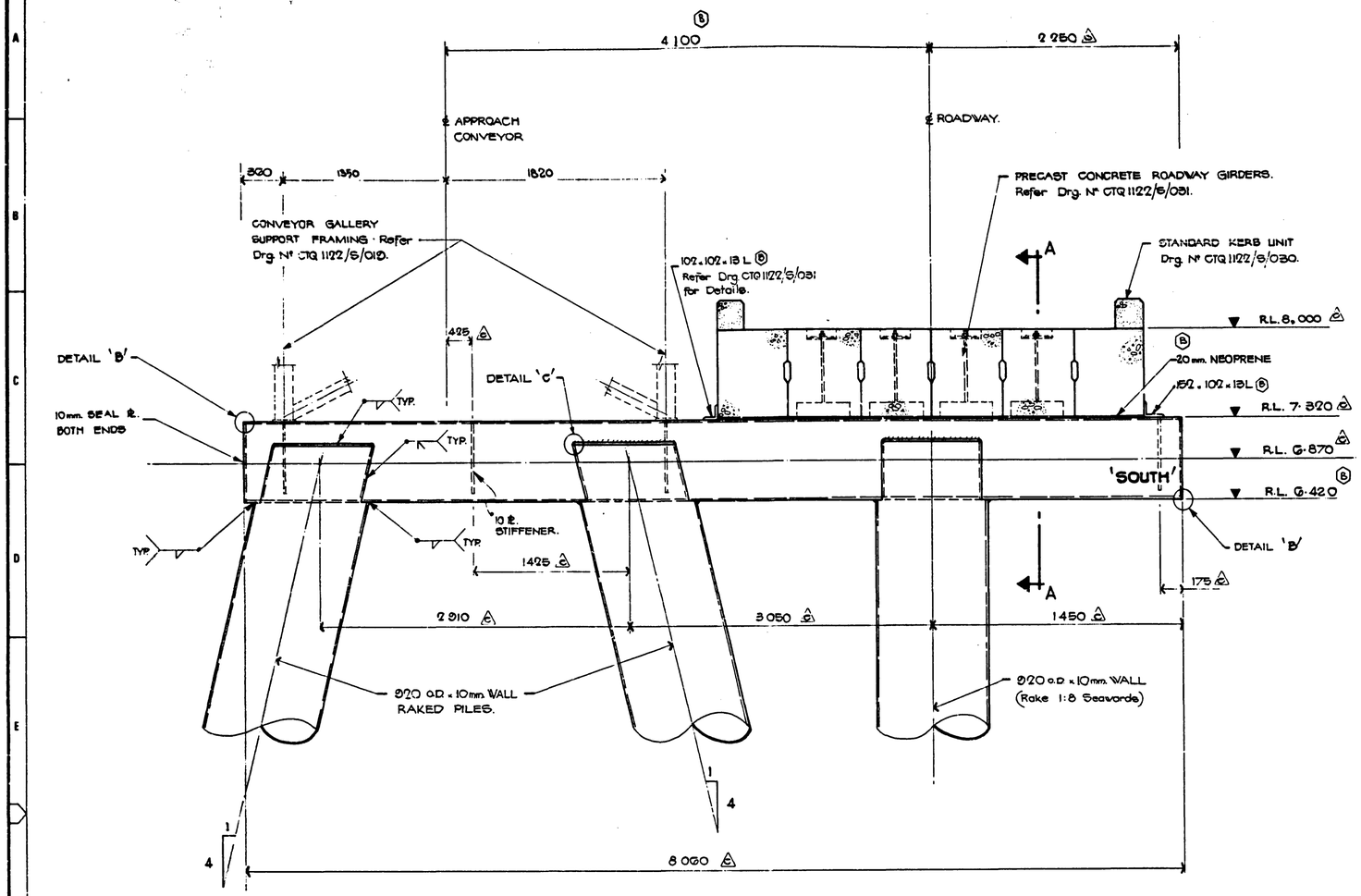

PILE BENTS 275, 276, 277, 278, 279.

Scale: 1:20

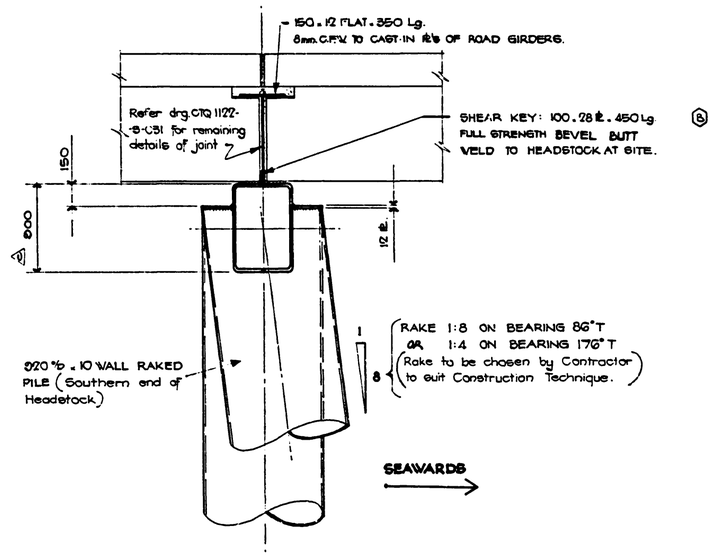

SECTION A-A.

1:20.

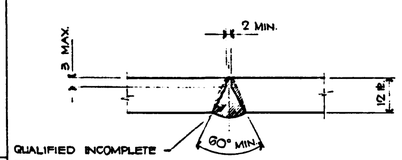

DETAIL 'A'.

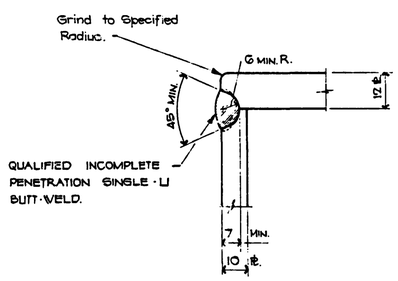

DETAIL 'B'

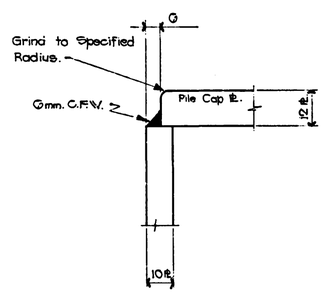

DETAIL 'C'.

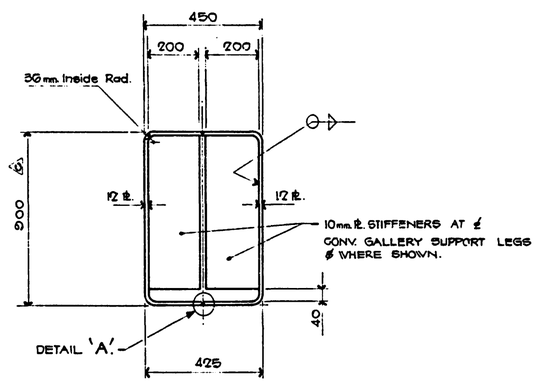

HEADSTOCK SECTION.

NOTES:

1. FOR LOCATION OF PILE BENTS · REFER GEN. PLAN DRG. Nº CTQ 1122/S/001
2. FOR A TYPICAL PILE BENT CROSS-SECTION REFER DRG. Nº CTQ 1122/S/005
3. ALL WELDS · 6 mm. C.F.W. UNLESS NOTED.
4. FOR STANDARD ROADWAY JOINT DETAILS · REFER DRG. Nº CTQ 1122/S/031.

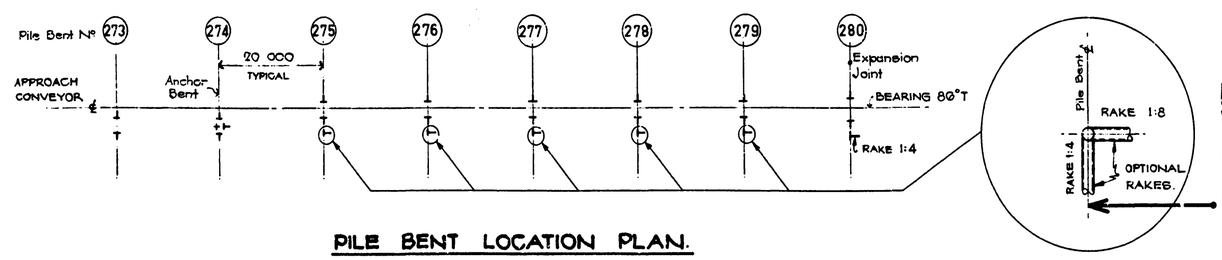

PILE BENT LOCATION PLAN.

NOTE: All Piles rake 1:4 unless noted otherwise.

NOTE: △ WITH THE PILES IN THE AMENDED POSITIONS RE. REVISION C – ONLY THE 1:4 RAKE IN THE PLANE OF THE BENT IS ALLOWABLE

THE CORPORATION OF THE TREASURER OF QUEENSLAND

Nº.	DATE.	AMENDMENTS
A	20.12.76	Roadway construction altered.
B	JAN '77	℄ ROAD TO ℄ CONV. RL's AMENDED.
C	15-11-77	PILE LOCATIONS & HEADSTOCK LENGTH AMENDED TO SUIT CONTRACTOR'S CONSTRUCT

C S R REFERENCE Nº

THE SUGAR BOARD
BULK SUGAR TERMINALS

SCALES 1:10 U.N.
DRAWN J.T.
PASSED
DATE DEC. '76

B.S.T. LUCINDA STAGE III
APPROACH JETTY.
PILE BENTS Nº 275-279 inc.

DRAWING Nº CTQ1122/S/010 C

MACDONALD WAGNER & PRIDDLE PTY. LTD.
CONSULTING ENGINEERS 213 JE PAILS TERRACE, FORTITUDE VALLEY, QLD. 4006 PH 52 7123
IN ASSOCIATION WITH
CSR LIMITED

Docusign Envelope ID: EFC52467-A2A0-4DE2-91D5-216F30602930

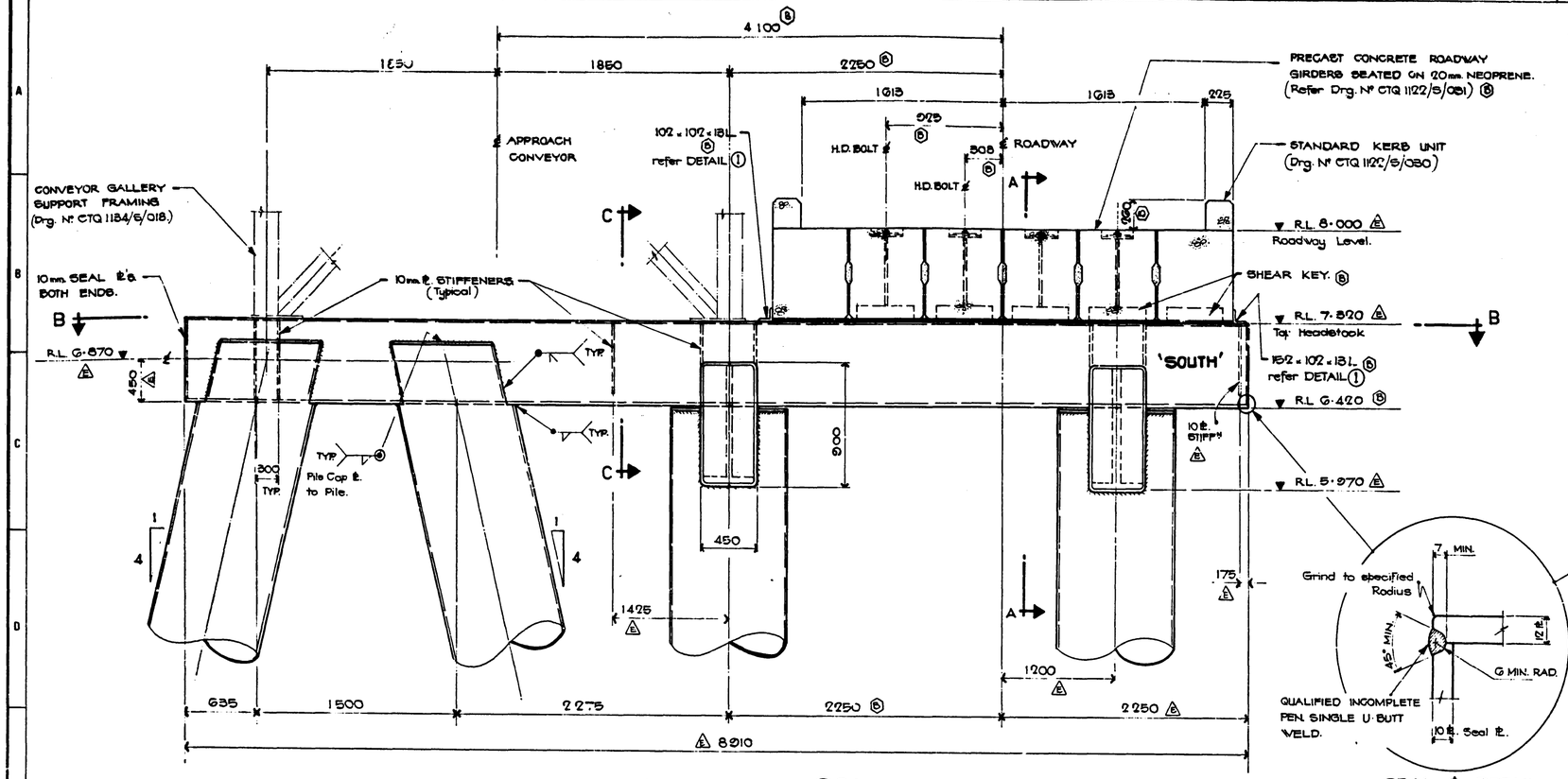

PILE BENT 281

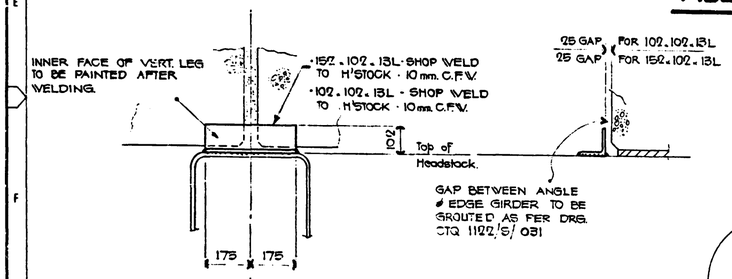

DETAIL 1

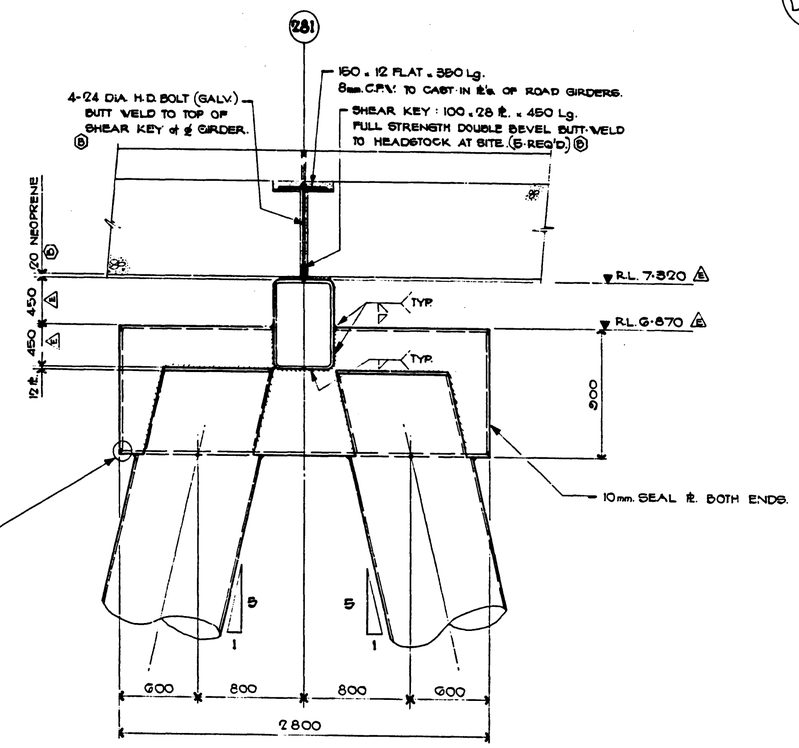

SECTION A·A

SEAL ℞. DETAIL

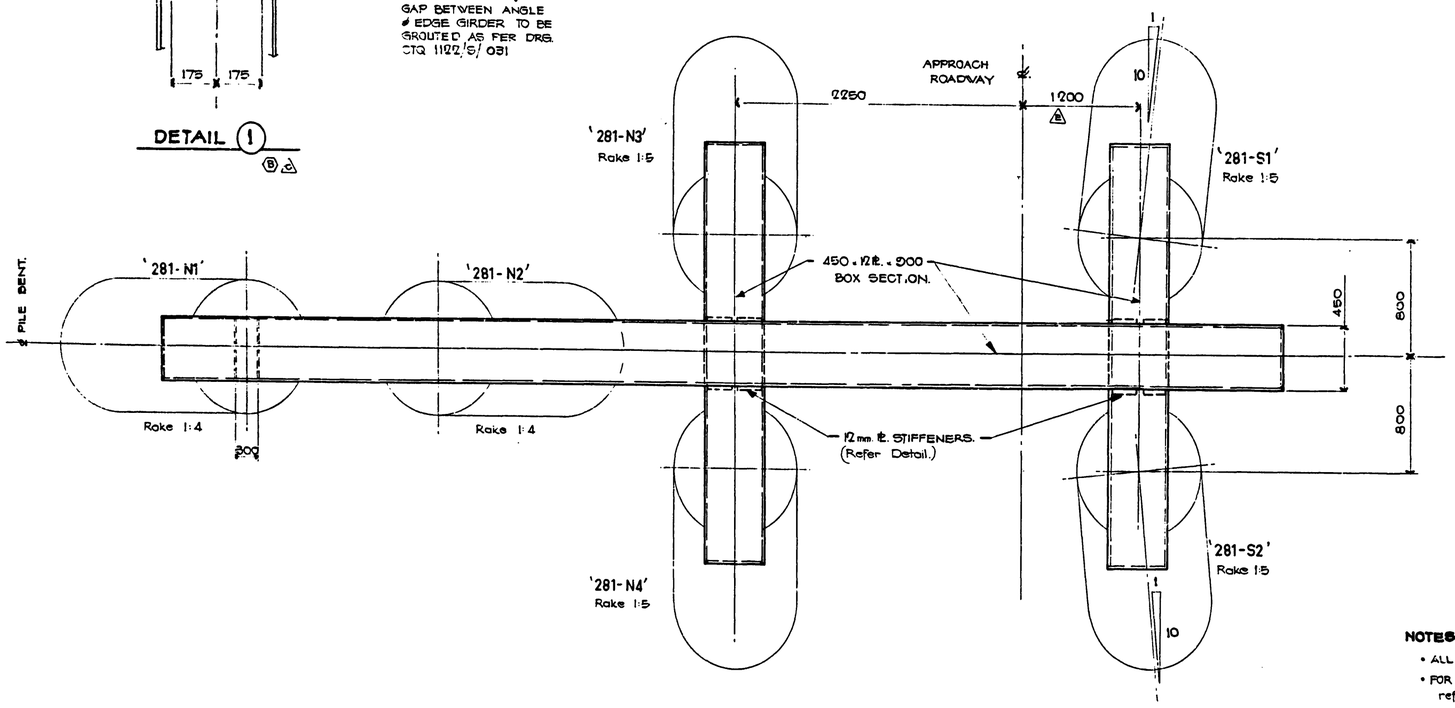

SECTION B·B

NOTE ∇ ALL PILES 920 o.d. × 10mm. WALL

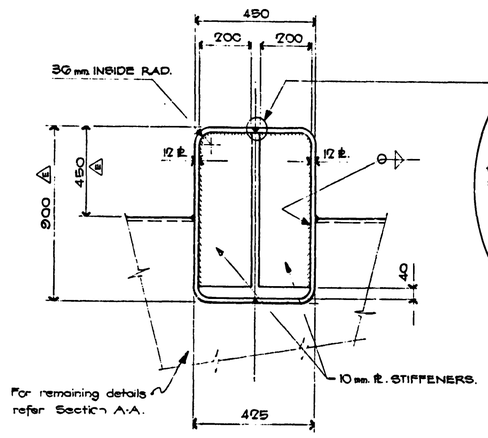

SECTION C·C

Scale 1:10.

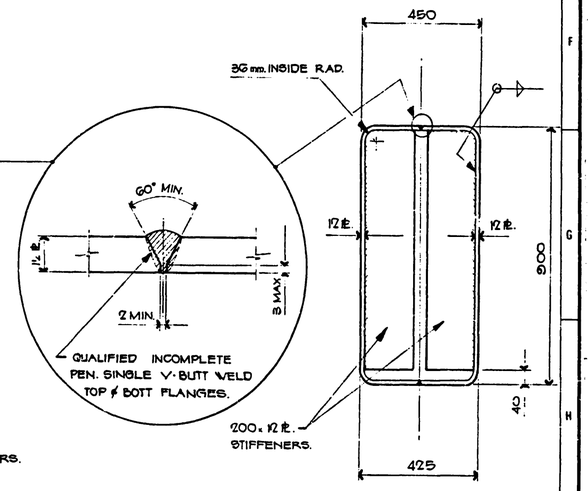

450 × 12℞. × 900 BOX SECT. DETAIL

Scale 1:10.

NOTES:

- ALL WELDS 6mm. C.F.W. UNLESS NOTED
- FOR DETAILS OF STD. DECK UNITS - refer drg. nº CTQ 1122/S/081.

THE CORPORATION OF THE TREASURER OF QUEENSLAND

Nº.	DATE	AMENDMENTS
A	20.12.76	Roadway construction altered.
B	JAN. '77	DIMENSION 4100 WAS 4000. NEOPRENE AMEND
C	10·5·77	DETAIL 1 AMENDED
D	12·5·77	SITE WELDING OF 152 L AMENDED TO SHOP WELDING TO SUIT CONTRACTOR.
E	18·11·77	PILE BENT AMENDED TO SUIT CONTRACTORS' CONSTRUCTION METHOD.

CSR REFERENCE Nº.

THE SUGAR BOARD
BULK SUGAR TERMINALS

SCALES 1:20
DRAWN J.T.
PASSED
DATE DEC. '76

B.S.T. LUCINDA STAGE III
APPROACH JETTY.
PILE BENT Nº. 281.

DRAWING Nº CTQ 1122/S/012 E

MACDONALD WAGNER & PRIDDLE PTY. LTD.
CONSULTING ENGINEERS 112 ST PAULS TERRACE FORTITUDE VALLEY QLD 4006 PH 51 7122
IN ASSOCIATION WITH
CSR LIMITED

Docusign Envelope ID: EFC52467-A2A0-4DE2-91D5-216F30602930

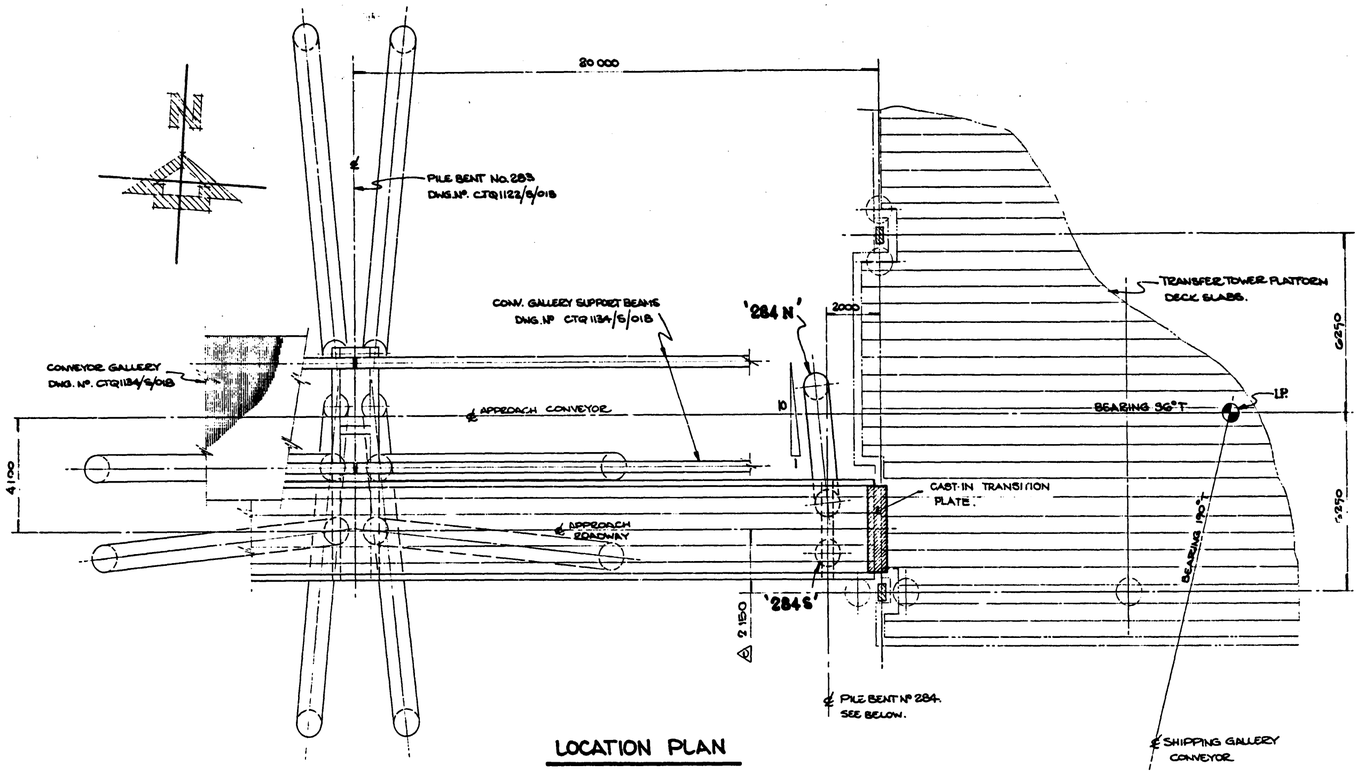

LOCATION PLAN

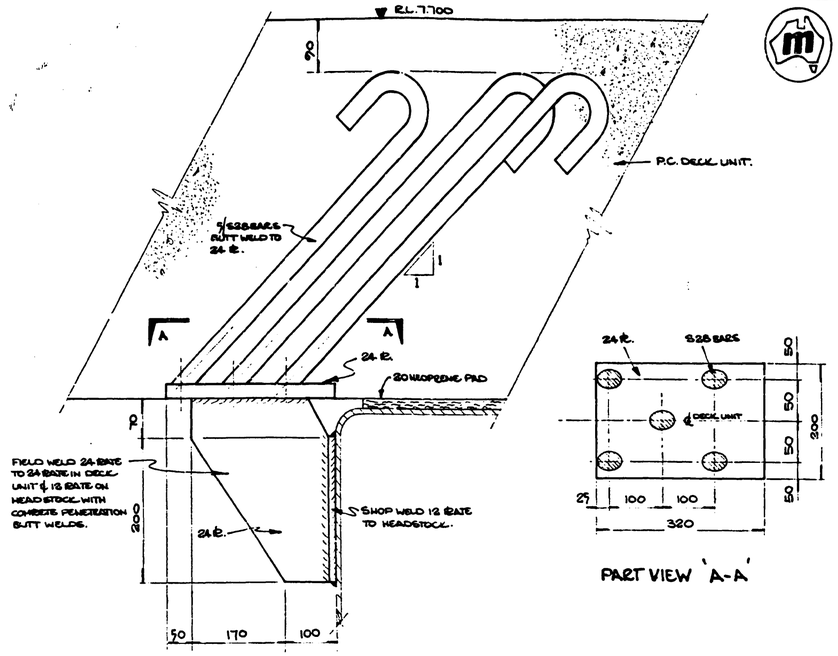

PART VIEW 'A-A'

DECK UNIT RETAINING BRACKET
TYPICAL FOR PILE BENT Nºs 282, 283 & 284.

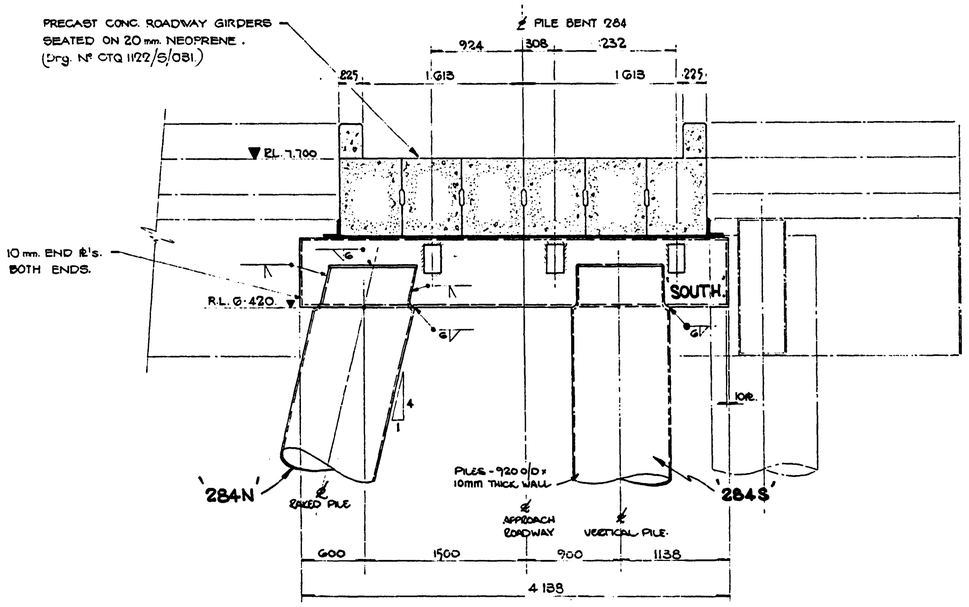

PILE BENT Nº 284

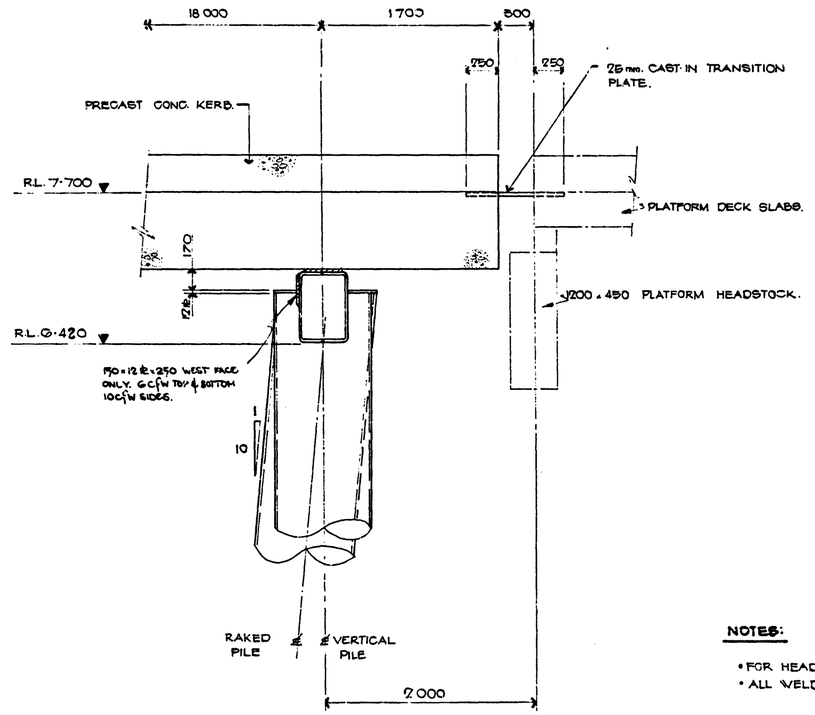

END VIEW

NOTES:

- FOR HEADSTOCK DETAILS - REFER DRG. CTQ 1122/S/010
- ALL WELDS 6mm C.F.W. UNLESS NOTED.

THE CORPORATION OF THE TREASURER OF QUEENSLAND

Nº	DATE	AMENDMENTS
A	20·12·76	Roadway construction altered.
B	JAN '77	PILE CENTRES AMENDED DECK UNIT HD BRACKET DETAILS ADDED.
C	SEPT '77	Dimension altered for Bent Position.

C S R REFERENCE Nº.

THE SUGAR BOARD
BULK SUGAR TERMINALS

SCALES 1:100 & 1:25
DRAWN R.K.L.
PASSED
DATE DEC' 76

B.S.T. LUCINDA STAGE III
APPROACH JETTY
PILE BENT Nº 284

DRAWING Nº CTQ 1122/S/014 C

MACDONALD WAGNER & PRIDDLE PTY. LTD.
CONSULTING ENGINEERS 313 ST PAULS TERRACE, FORTITUDE VALLEY, QLD. 4006 PH. 52 7122.
IN ASSOCIATION WITH
CSR LIMITED

Docusign Envelope ID: EFC52467-A2A0-4DE2-91D5-216F30602930

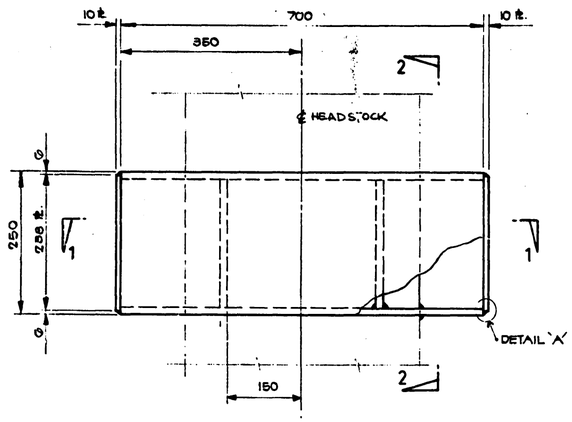

PLAN.

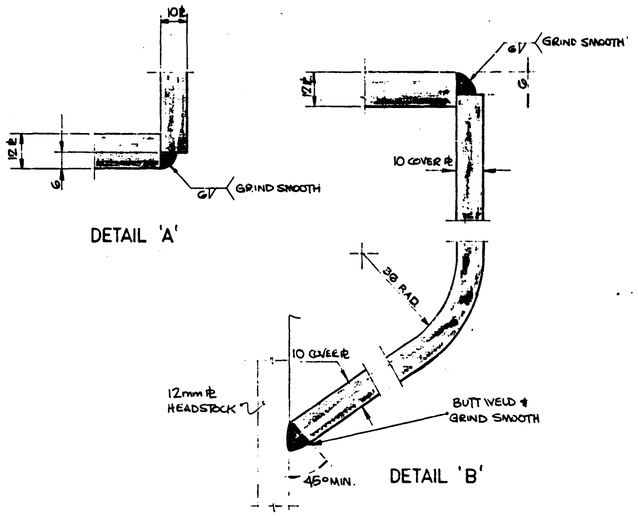

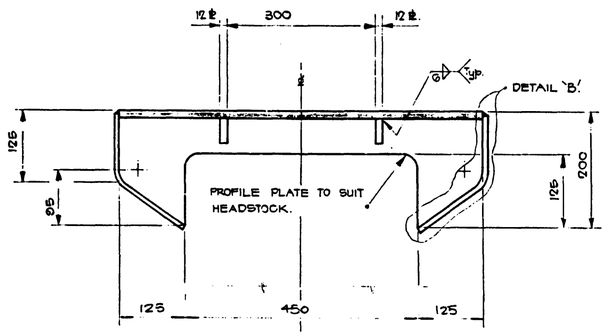

SECTION 1-1

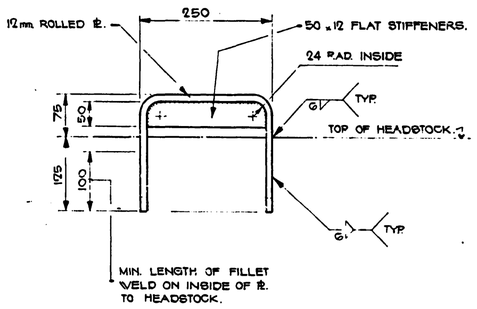

SECTION 2-2

HEADSTOCK SHOE

For Conveyor Gallery Support Framing only

PILE TOLERANCE TABLE

PILE BENT No.	1-31 & 104-231	32-103	232-255	256-274	275-284	ANCHOR PILES
TOLERANCE (t_1) ON PILE POSITION PARALLEL TO BEARING 86°T (mm) AFTER DRIVING. - FIG 1.	±150	±150	±150	±150	±150	±100
TOLERANCE (t_2) ON PILE POSITION PARALLEL TO BEARING 176°T. (mm) AFTER DRIVING - FIG 1.	±100	±100	±100	±100	±150	±100
TOLERANCE ON PILE POSITION PARALLEL TO BOTH BEARING 86°T AND BEARING 176°T. AFTER PULLING (mm) OF PILE AND BRACING.	±100	±100	±100	±100	±100	±75
REMARKS.	JETTING TO RL-9.000 REQUIRED WHEN PULLING PILE INTO POSITION.	NO JETTING PERMITTED				SEE NOTE 5

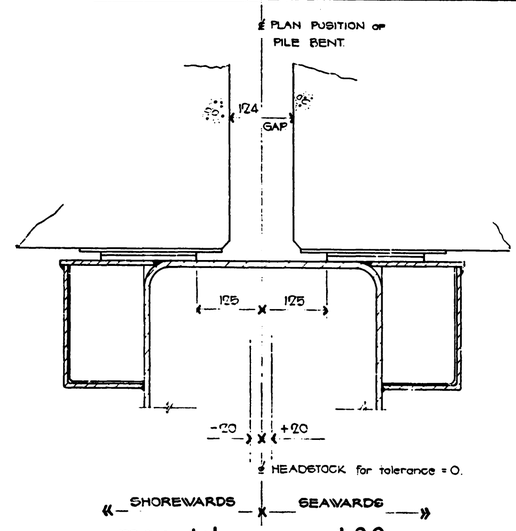

max. tolerance = ± 20 mm.

HEADSTOCK TOLERANCE FOR EXPANSION JOINT.

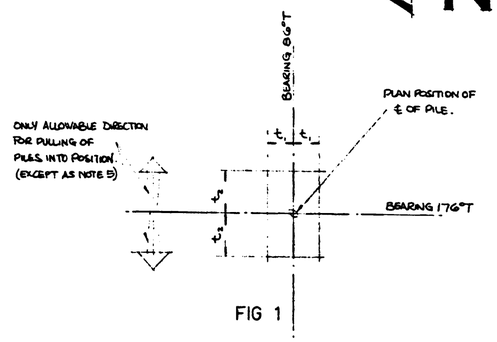

FIG 1

NOTES:

1. NEOPRENE BEARING PADS SHALL HAVE A MINIMUM WIDTH OF 120mm. & SHALL BE POSITIONED 45 mm. FROM THE OUTSIDE FACE OF THE HEADSTOCK.
2. TOLERANCE ON PILE POSITIONS AFTER DRIVING & AFTER PULLING & BRACING SHALL BE IN ACCORDANCE WITH THE TABLE ABOVE.
3. PILES SHALL BE PULLED ONLY AS SHOWN IN FIG. 1 ie PARALLEL TO BEARING 86° T (refer Note 5)
4. HEADSTOCK ℄ TO BE CHOSEN SUCH THAT HEADSTOCK IS NEARLY AS POSSIBLE CENTRALLY LOCATED IN PILES.
5. ANCHOR PILES MAY BE PULLED PARALLEL TO BEARING 86°T OR BEARING 176°T OR BOTH AS NECESSARY. JETTING TO RL.-9.000 REQUIRED ON ANCHOR PILES WITHIN PILE BENT Nos 1-31 & 104-231

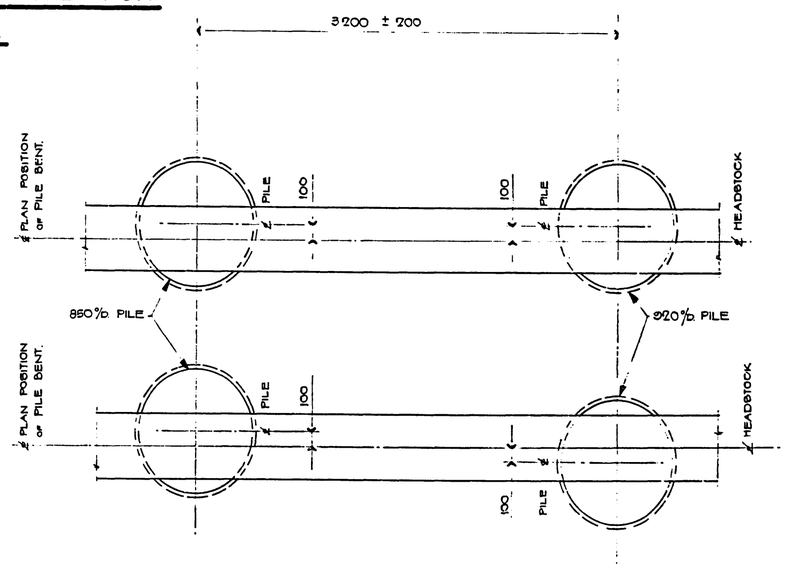

PILE TOLERANCES

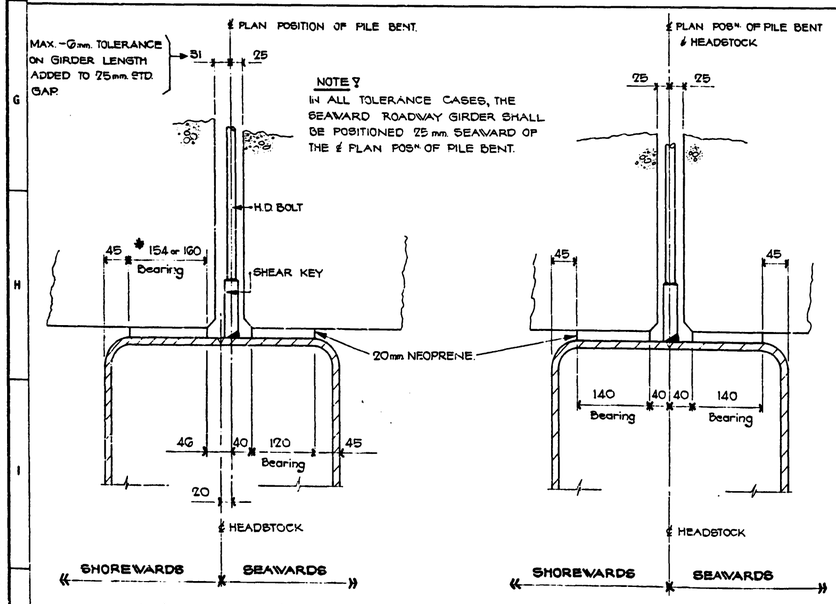

max. tolerance = 20 mm.
(SHOREWARDS)

tolerance = 0 mm.

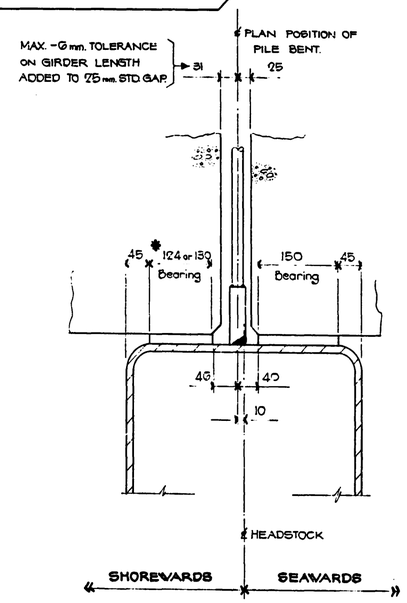

max. tolerance = 10 mm.
(SEAWARDS)

HEADSTOCK TOLERANCES

✱ Lower Dimension obtained using max.-6mm. tolerance on Girder Length.
Higher Dimension obtained using max.+0mm. tolerance on Girder Length.

THE CORPORATION OF THE TREASURER OF QUEENSLAND

No	DATE	AMENDMENTS
A	18·1·77	Drg Revised for Conc. Roadway Girder Design.
B	17·3·77	Headstock shoe amended to suit Contractor

CSR REFERENCE No.

THE SUGAR BOARD
BULK SUGAR TERMINALS

SCALES AS SHOWN
DRAWN L.E. HUNT.
PASSED J.N.
DATE AUG. '76

B.S.T. LUCINDA STAGE III
APPROACH JETTY
MISCELLANEOUS DETAILS

DRAWING No. CTQ.1122/S/015 B

MACDONALD WAGNER & PRIDDLE PTY. LTD.
CONSULTING ENGINEERS 212 ST PAUL'S TERRACE FORTITUDE VALLEY QLD 4006 Ph 52 7133
IN ASSOCIATION WITH
CSR LIMITED

Docusign Envelope ID: EFC52467-A2A0-4DE2-91D5-216F30602930

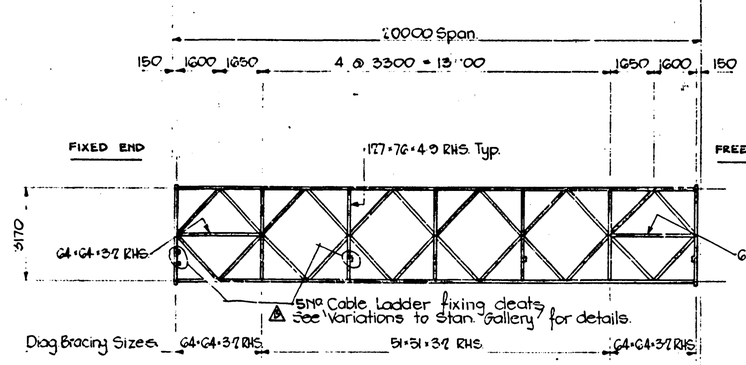

TOP CHORD.

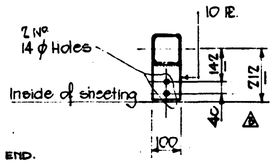

GIRT CLEATS.

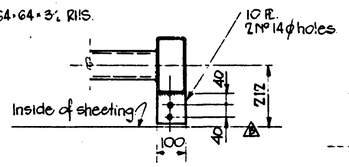

END FRAME GIRT CLEATS.

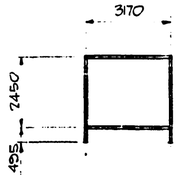

END FRAME

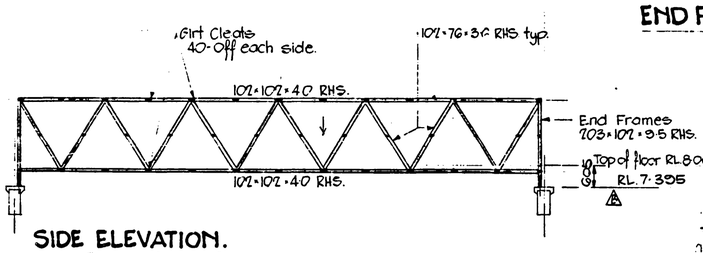

SIDE ELEVATION.

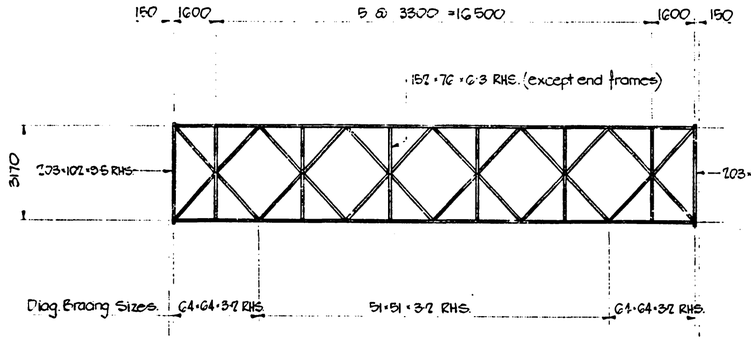

BOTTOM CHORD.

FREE END DETAIL.
1-OFF PER SPAN.

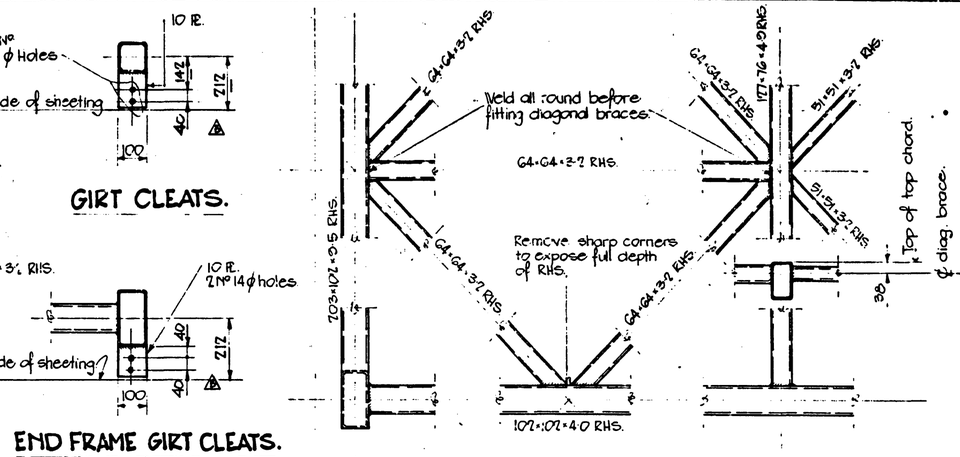

TOP CHORD.
Scale 1:10

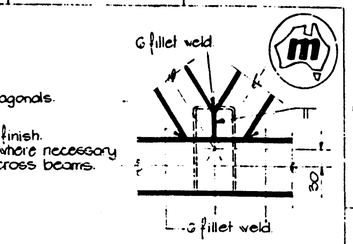

DETAIL 1

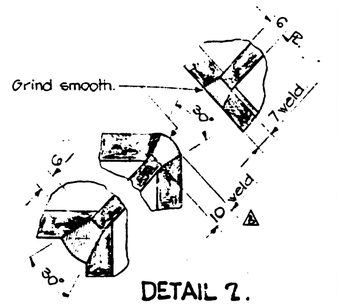

DETAIL 2.

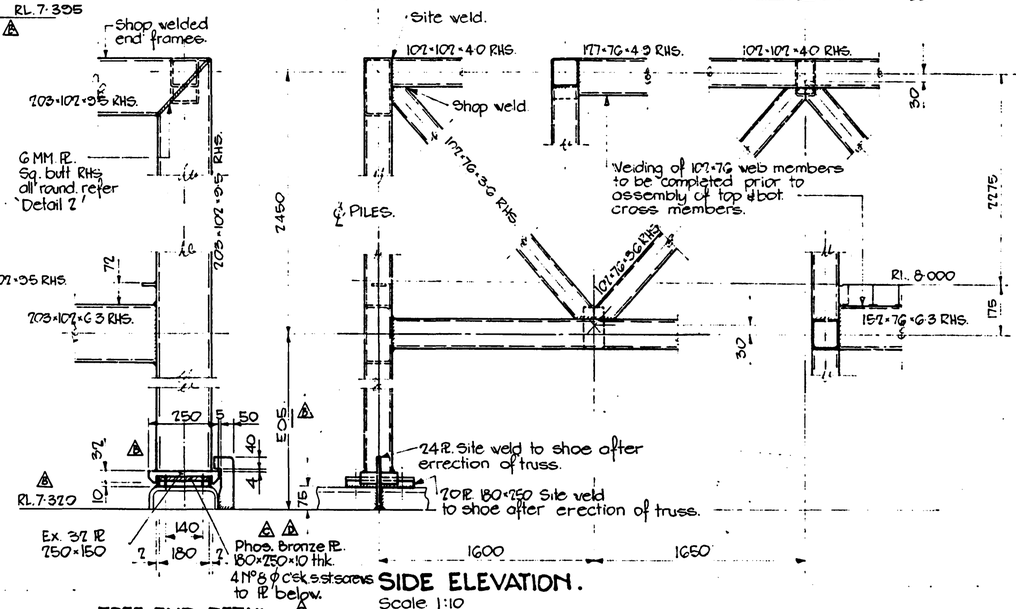

SIDE ELEVATION.
Scale 1:10

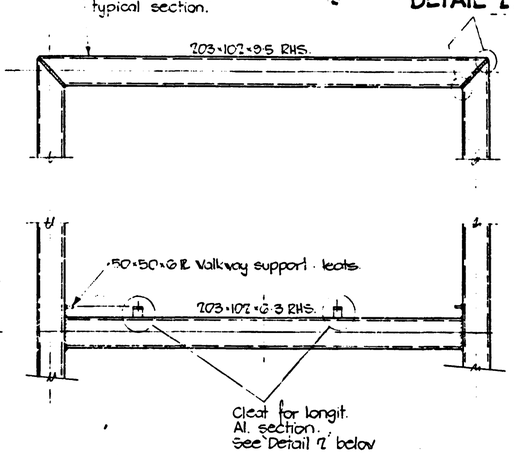

TYP. END FRAME.
Scale 1:20

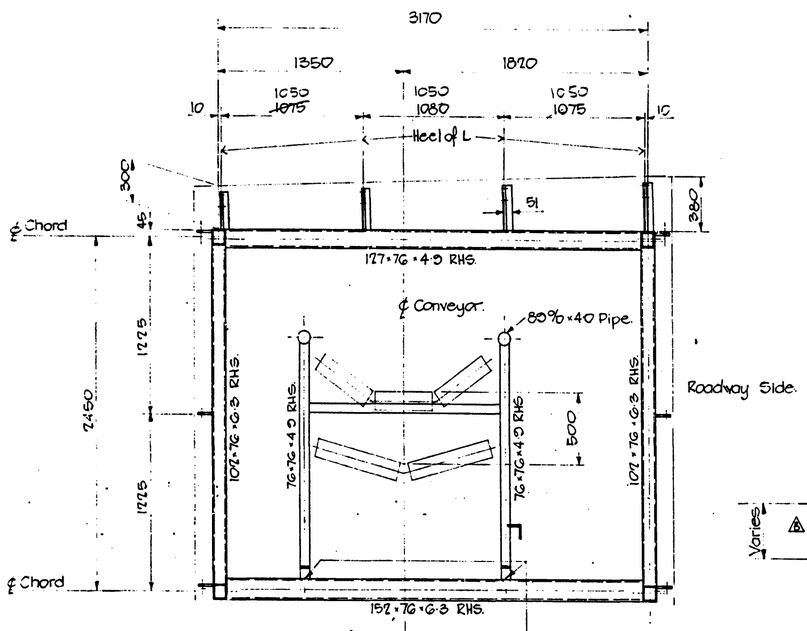

To be set up & welded using jigs to maintain required tolerances on conveyor stringers. Refer drg. no CTQ1122/S/023.

TYPICAL SECTION.
Scale 1:20.

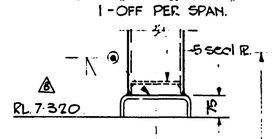

FIXED END DETAIL.
1-OFF PER SPAN.

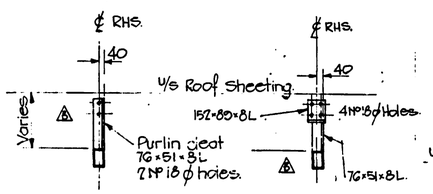

PURLIN CLEATS.

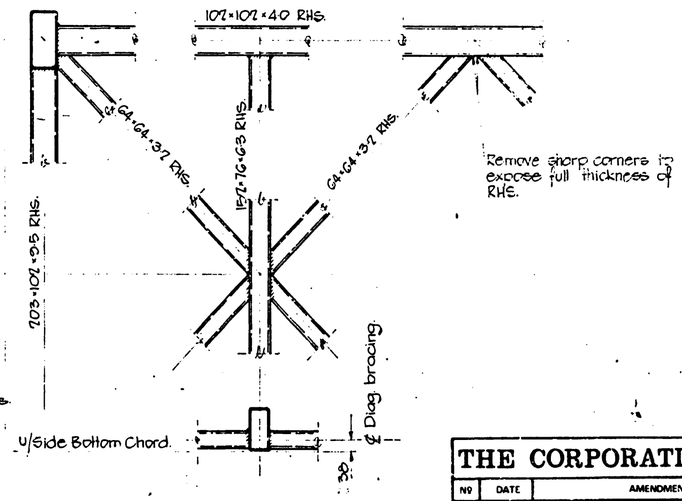

BOTTOM CHORD.
Scale 1:10.

NOTES.

1. For layout of standards spans & location of expansion joints, doorways, fire hose reels etc. refer drg. no CTQ1122/S/003 & 004
2. For variations to standard details refer drg. no CTQ1122/S/024
3. For orientation of free & free gallery ends refer drg. no CTQ1122/S/022

For General Notes and Fabrication Notes refer drg. no CTQ1122/S/024.

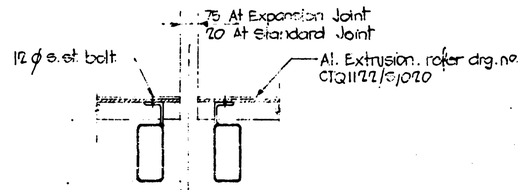

DETAIL 2.

THE CORPORATION OF THE TREASURER OF QUEENSLAND

No	DATE	AMENDMENTS
A	20-12-76	Headstock level altered. Brace deleted.
B	24-2-77	FREE END DETAIL DETAIL AMENDED. WELD SIZE ALTERED.
C	28-4-77	BRASS PL ALTERED TO PHOS. BRONZE; NOW SCREWED TO PL BELOW.
D	16-5-77	LENGTH OF PHOS. BRONZE PL ALTERED.

CSR REFERENCE No.

THE SUGAR BOARD
BULK SUGAR TERMINALS

SCALES 1:10 1:100
DRAWN R G Holmes
PASSED
DATE JUL 76.

B.S.T. LUCINDA STAGE III
APPROACH JETTY.
STANDARD CONV. GALLERY.

DRAWING No
CTQ1122/S/018
A B C D

MACDONALD WAGNER & PRIDDLE PTY. LTD.
CONSULTING ENGINEERS 213 ST PAUL'S TERRACE FORTITUDE VALLEY QLD 4006. Ph. 52 7122
IN ASSOCIATION WITH
CSR LIMITED

Docusign Envelope ID: EFC52467-A2A0-4DE2-91D5-216F30602930

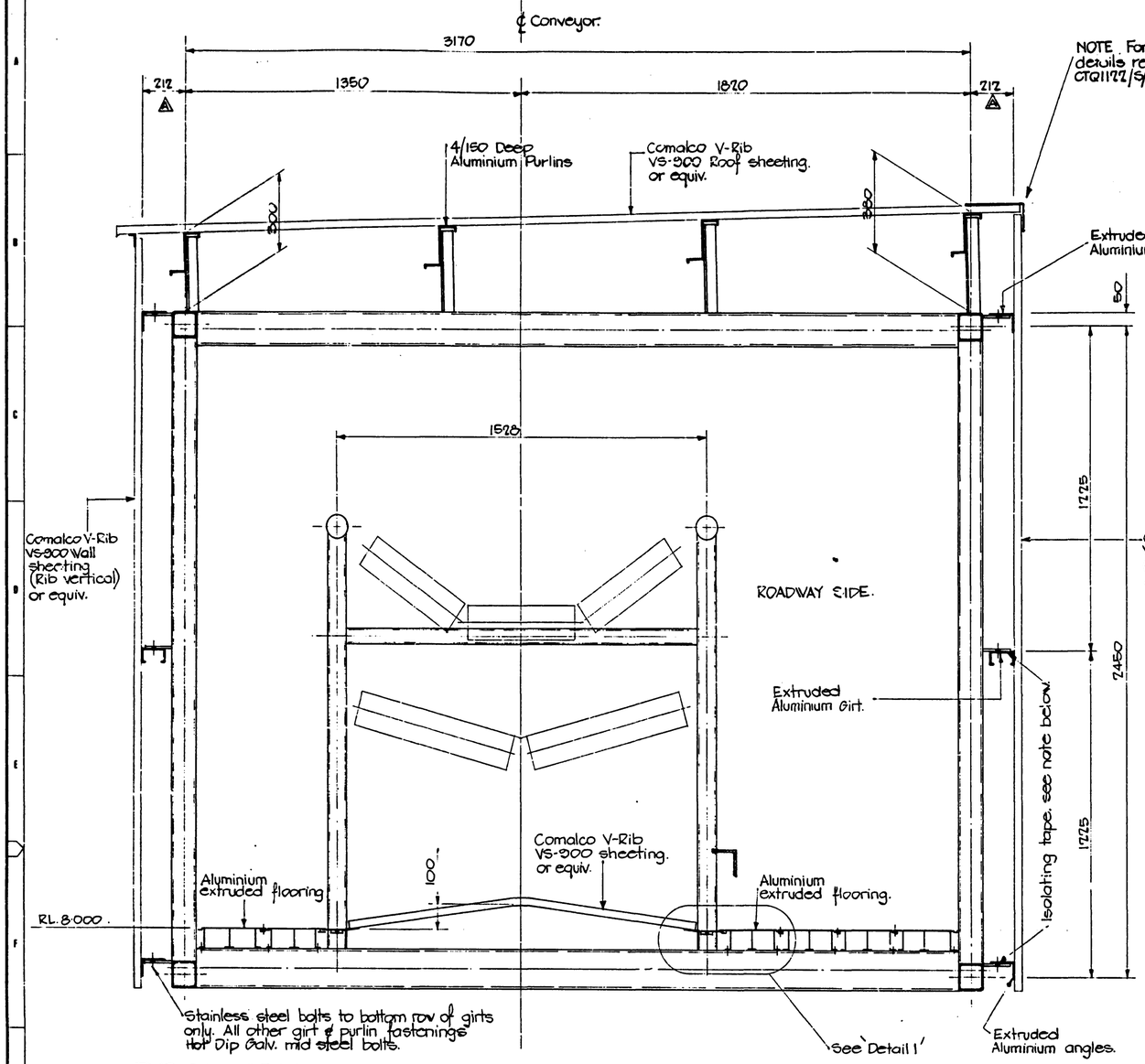

TYPICAL SECTION.
Scale. 1:10.

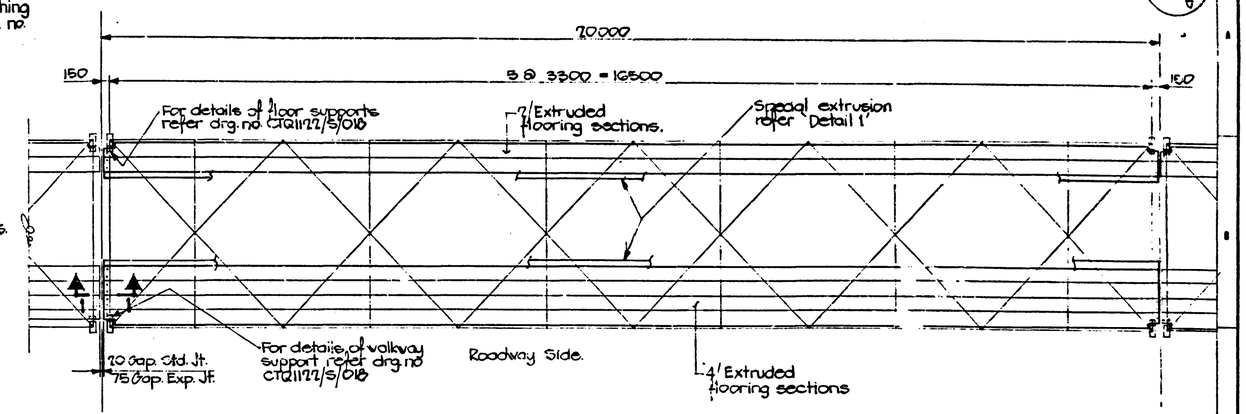

FLOOR PLAN.

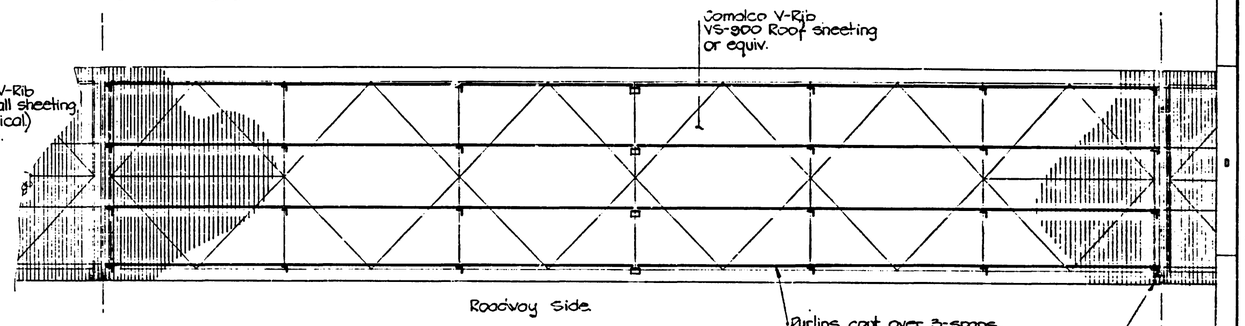

ROOF PLAN.

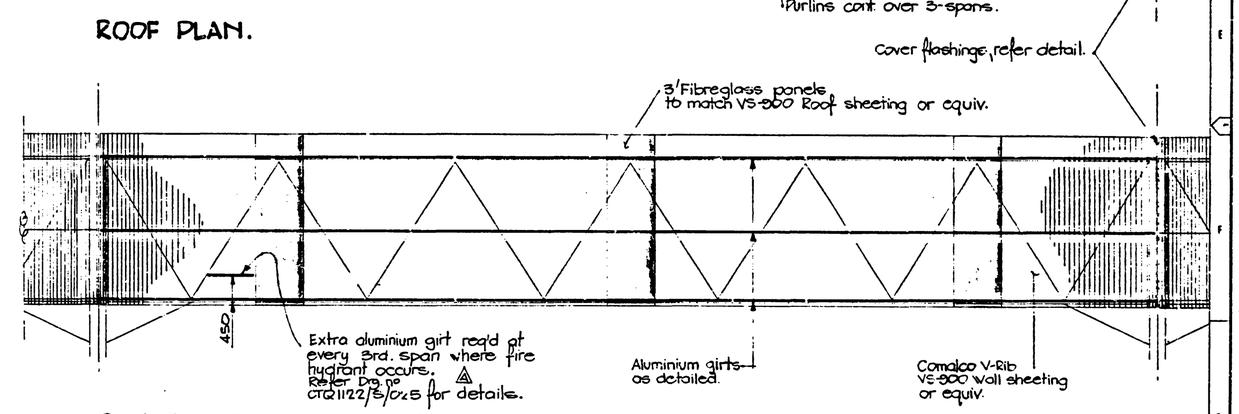

SIDE ELEVATION. (ROADWAY SIDE)

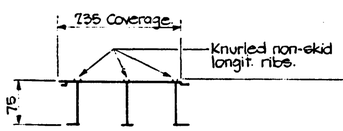

ALUMINIUM EXTRUDED FLOOR SECTION.

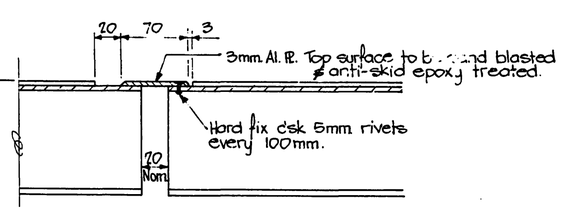

SECTION 1-1 (AT STANDARD JOINT)

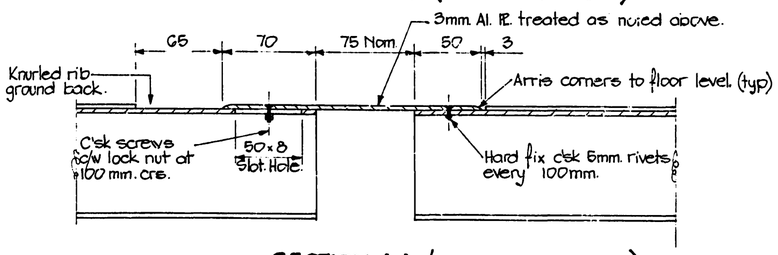

SECTION 1-1 (AT EXPANSION JOINT)

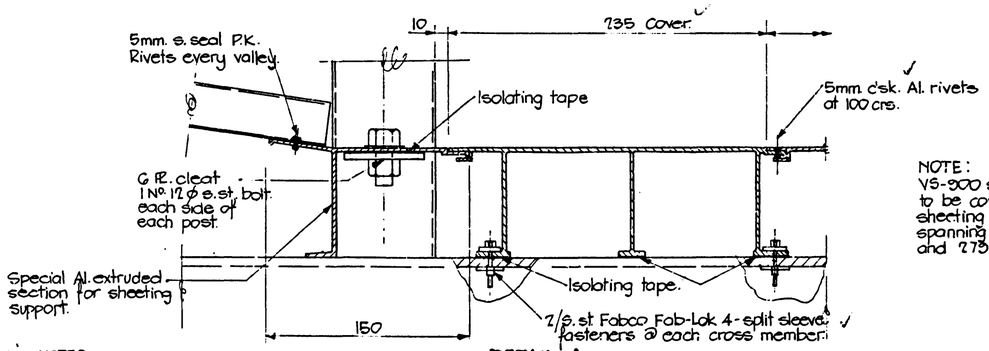

DETAIL 1 Scale. 1:2.

NOTE:
VS-900 sheeting under conveyor belt is to be covered with 1 mm. thk. flat aluminium sheeting riveted to V-Rib for galleries spanning between pile bents No 1 to 3 and 273 – 281 only.

NOTES.
All contact surfaces between aluminium & steel eg. floor sections, purlins & girts, to be isolated with the following tape or its equiv. PLICOFLEX 340-70 Butyl/PVC laminated tape to be applied with PLIOFLEX No 310 Primer in accordance with manufacturer's instructions.
All Aluminium components, cladding, floors, purlins & girts to be assembled & fixed to complete steel galleries on shore prior to its erection in place on headstock. Cover flashings roof, walls & floors to be completed in place after galleries have been welded to headstock.

THE CORPORATION OF THE TREASURER OF QUEENSLAND

No	DATE	AMENDMENTS
A	24·2·77	DIMENSION ALTERED PURLIN CLEAT ALTERED. GIRT ADDED

C S R REFERENCE No.

THE SUGAR BOARD
BULK SUGAR TERMINALS

SCALES 1:10 1:50
DRAWN R.G. HOLMES
PASSED
DATE AUG 76

B.S.T. LUCINDA STAGE III
APPROACH JETTY.
STANDARD SPAN CLADDING

DRAWING No CTQ1122/S/020 A

MACDONALD WAGNER & PRIDDLE PTY. LTD.
CONSULTING ENGINEERS 313 ST PAUL'S TERRACE FORTITUDE VALLEY QLD 4006 PH 52 7122
IN ASSOCIATION WITH
CSR LIMITED

Docusign Envelope ID: EFC52467-A2A0-4DE2-91D5-216F30602930

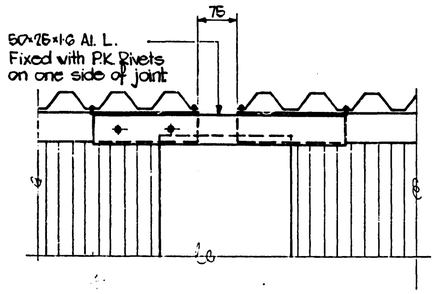

WALL SHEET. FLASHING JOINT

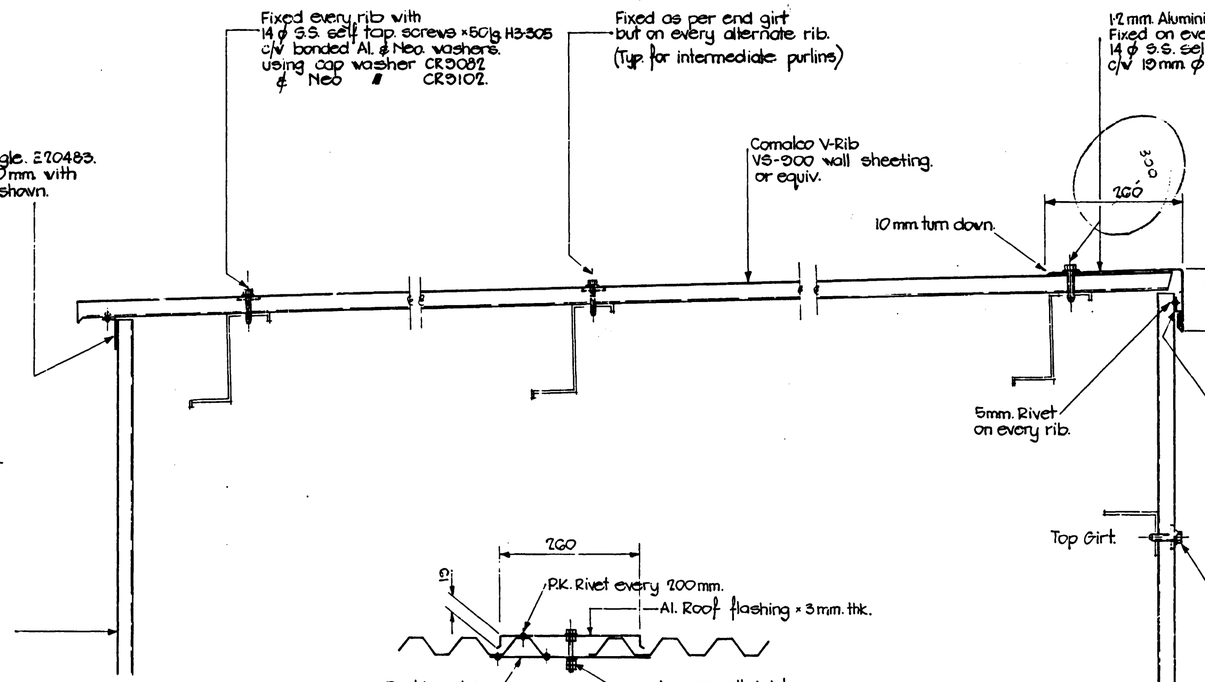

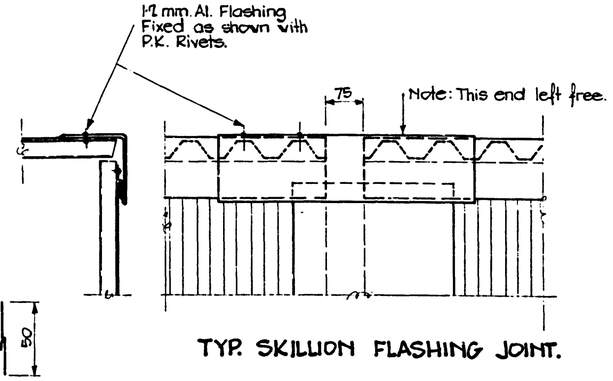

TYP. SKILLION FLASHING JOINT.

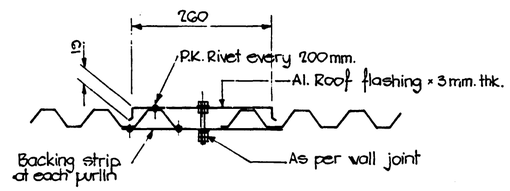

ROOF SHEET. DETAIL AT TRUSS JOINT

NOTE: Provide similar cover flashing over VS-900 sheeting beneath conveyor belt. (3 backing strips reqd)

NOTE! Fibre Glass sheets to be fixed on all girts at every rib. This applies to 300 mm. on each adjacent V-Rib sheeting.

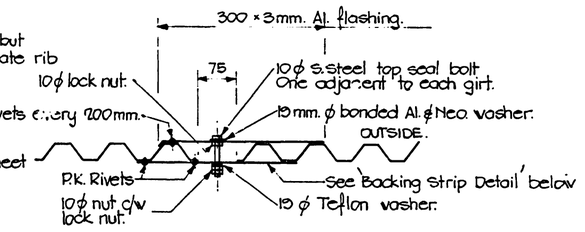

WALL SHEET. DETAIL AT EXPANSION JOINT.

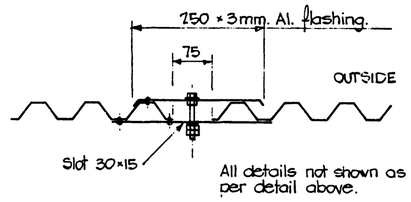

WALL SHEET. DETAIL AT STANDARD JOINT.

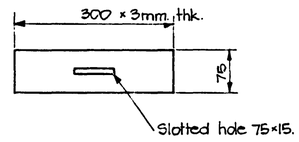

BACKING STRIP DETAIL.

Provide Backing Strip adjacent to each girt.

FIXING NOTES:

STITCHING:
Fix all Aluminium roof & wall sheeting at 200 mm. crs. using 5mm. dia. P.K. Al. self sealing rivets.

FIBRE GLASS STITCHING:
Fix at 100mm. crs. using 5mm. ϕ P.K. rivets with washers front & back of sheeting.

CORNERS:
Fix at every rib where noted above & adjacent to head & tail end structures.

P.K. RIVETS:
Denotes:- Aluminium self sealing 5mm. ϕ rivets used in conjunction with 1·2 mm. ϕ Al. & Neo. bonded washers. Sizes – ADG4, CG, & G8 to suit.

THE CORPORATION OF THE TREASURER OF QUEENSLAND

Nº.	DATE	AMENDMENTS

C.S.R. REFERENCE Nº.

THE SUGAR BOARD
BULK SUGAR TERMINALS

SCALES 1:5
DRAWN R.G. Holmes
PASSED
DATE AUG 76

B.S.T. LUCINDA STAGE III
APPROACH JETTY.
GALLERY FLASHING DETAILS

DRAWING Nº.
CTQ1122/S/021

MACDONALD WAGNER & PRIDDLE PTY. LTD.
CONSULTING ENGINEERS 313 ST. PAULS TERRACE, FORTITUDE VALLEY, QLD. 4006. PH 52 7122.
IN ASSOCIATION WITH
C.S.R. LIMITED

Docusign Envelope ID: EFC52467-A2A0-4DE2-91D5-216F30602930

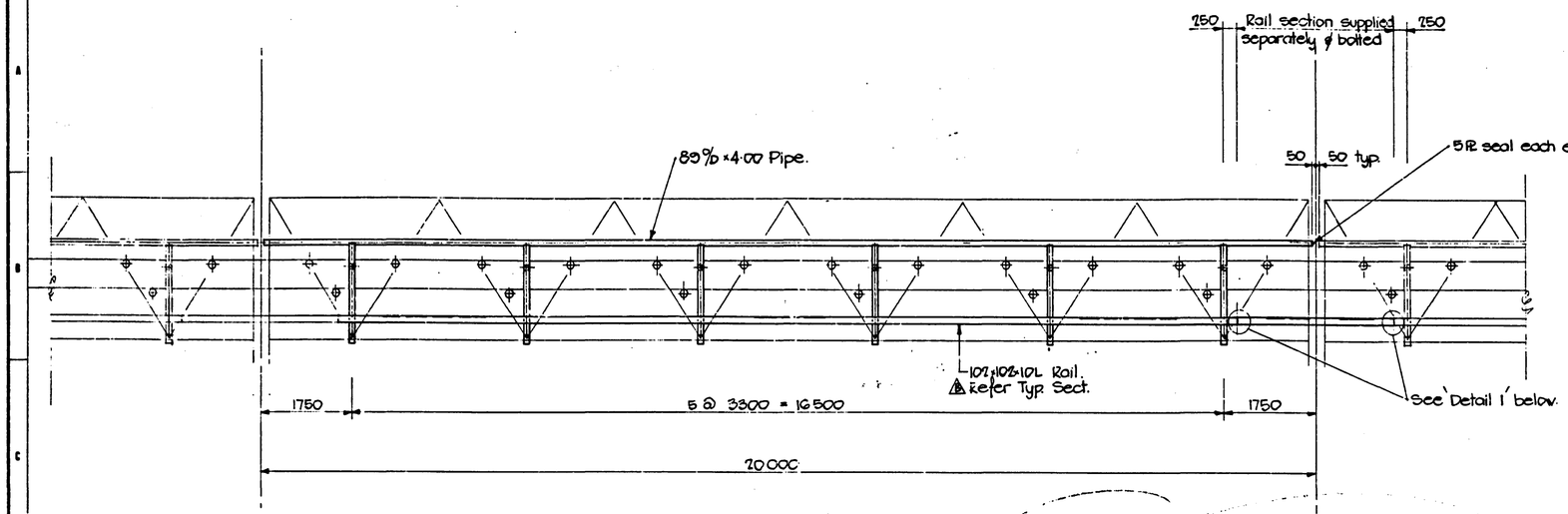

ELEVATION
Scale. 1:50

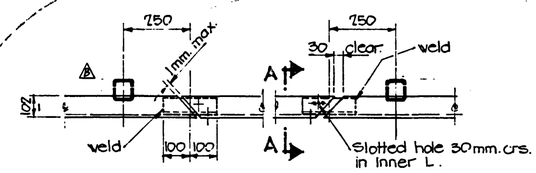

DETAIL 1 (PLAN)
Scale 1:10.

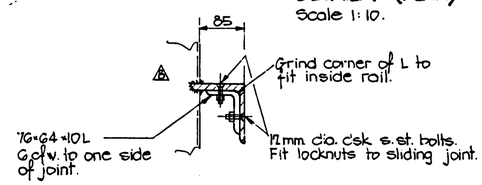

SECTION A-A
Scale. 1:5.

HOLD

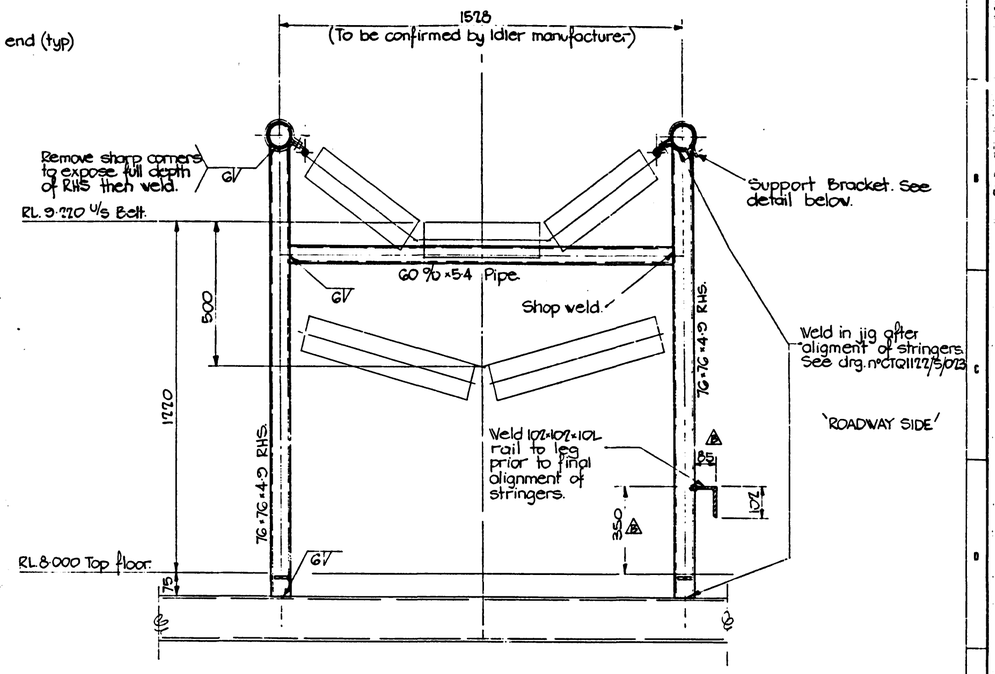

TYP. SECTION.
Scale. 1:10.

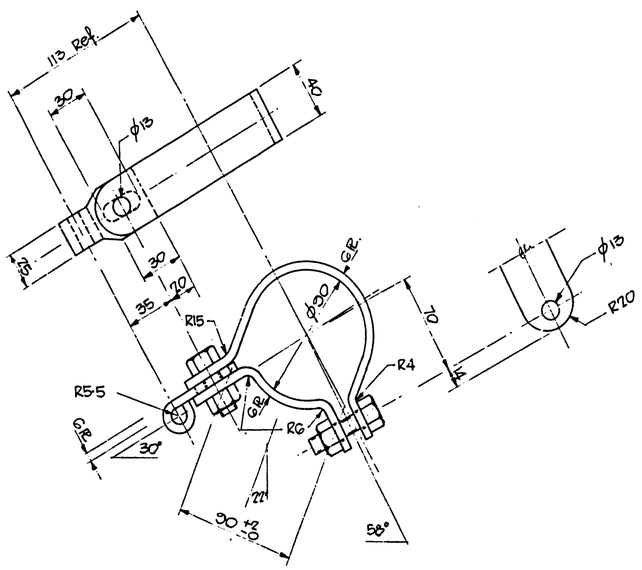

CARRYING IDLER SUPPORT BRACKET. SUPPLIED & FITTED UNDER NOMINATED CONTRACT Nº 14C. A
Scale. 1:2

Note: Dimensions to be checked for conformity with idlers.

Return Idler Brackets to be supplied & welded to stringer support leg under sub-contract Nº 14C. A

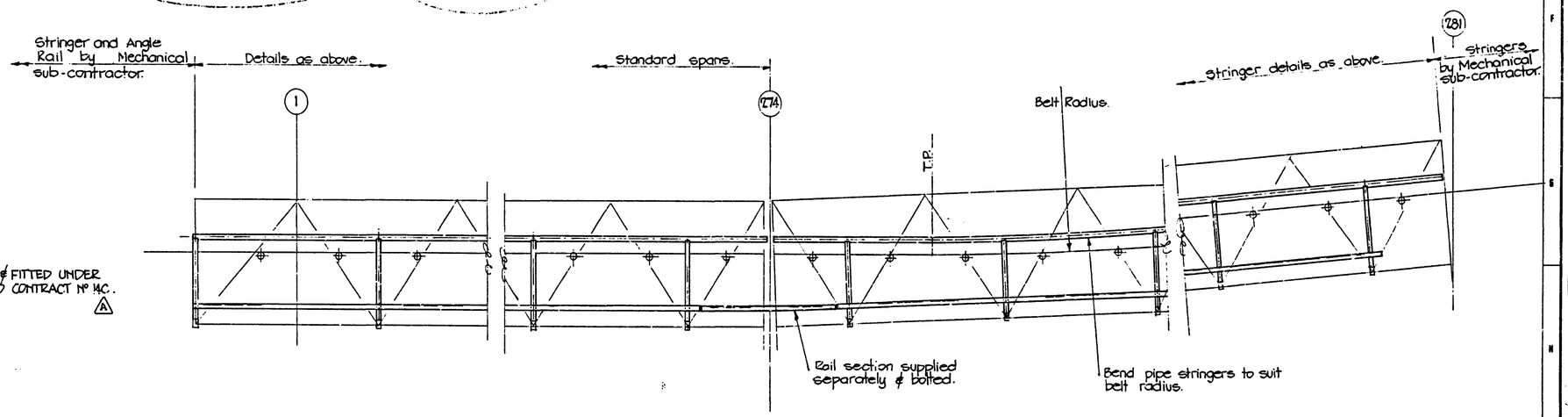

VARIATIONS TO STRINGERS TAIL END. PILE BENT 1

VARIATIONS TO STRINGERS. PILE BENTS 774 - 281

THE CORPORATION OF THE TREASURER OF QUEENSLAND

Nº	DATE	AMENDMENTS
A	29-11-76	CONTRACT Nº 11C NOW READS Nº 14C.
B	24-2-77	RAIL ALTERED AND EXTENDED UP INCLINE.

C S R REFERENCE Nº.

THE SUGAR BOARD
BULK SUGAR TERMINALS

SCALES AS SHOWN.
DRAWN R. HOLMES.
PASSED
DATE AUGUST.

B.S.T. LUCINDA STAGE III
APPROACH JETTY.
CONV. STRINGER DETAILS.

DRAWING Nº CTQ1122/S/022 A B

MACDONALD WAGNER & PRIDDLE PTY. LTD.
CONSULTING ENGINEERS 213 ST PAULS TERRACE FORTITUDE VALLEY QLD 4006 PH 52 7172
IN ASSOCIATION WITH
CSR LIMITED

Docusign Envelope ID: EFC52467-A2A0-4DE2-91D5-216F30602930

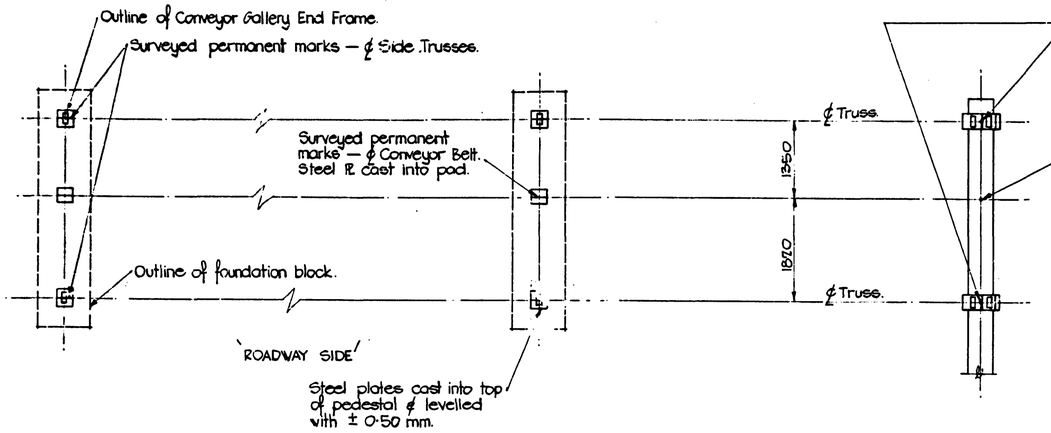

FOUNDATION PLAN – GALLERY ASSEMBLY JIG.

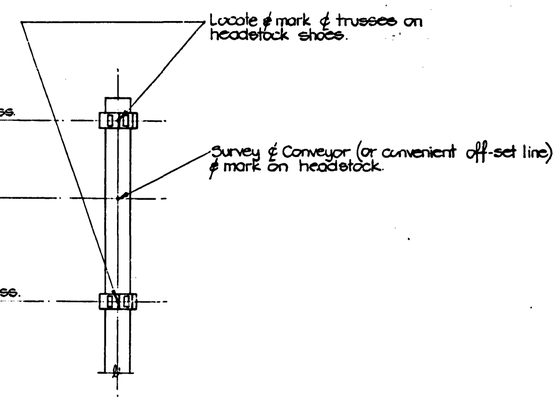

PLAN AT HEADSTOCK.

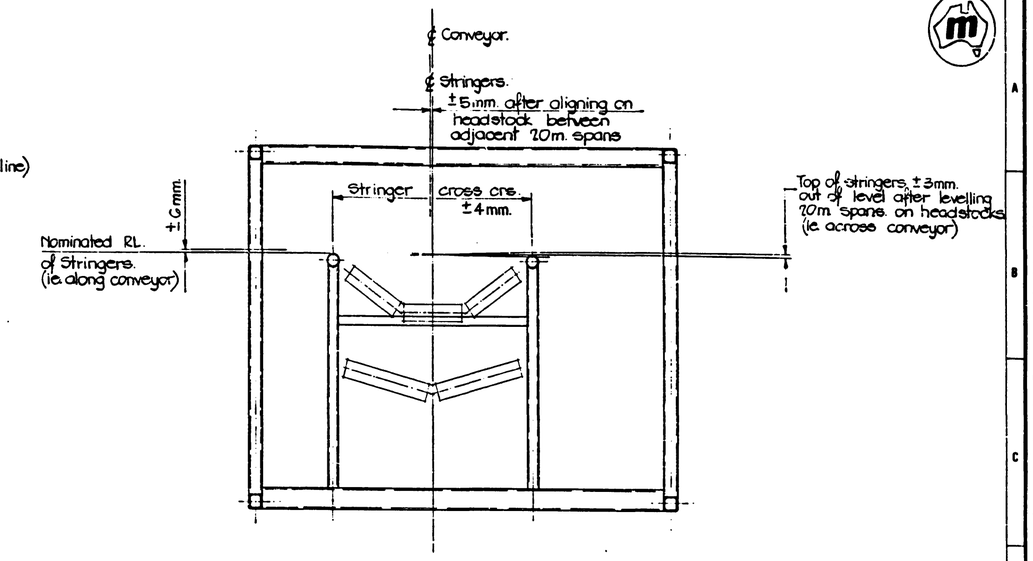

TYP. CROSS SECTION OF CONVEYOR.
Scale. 1:20.

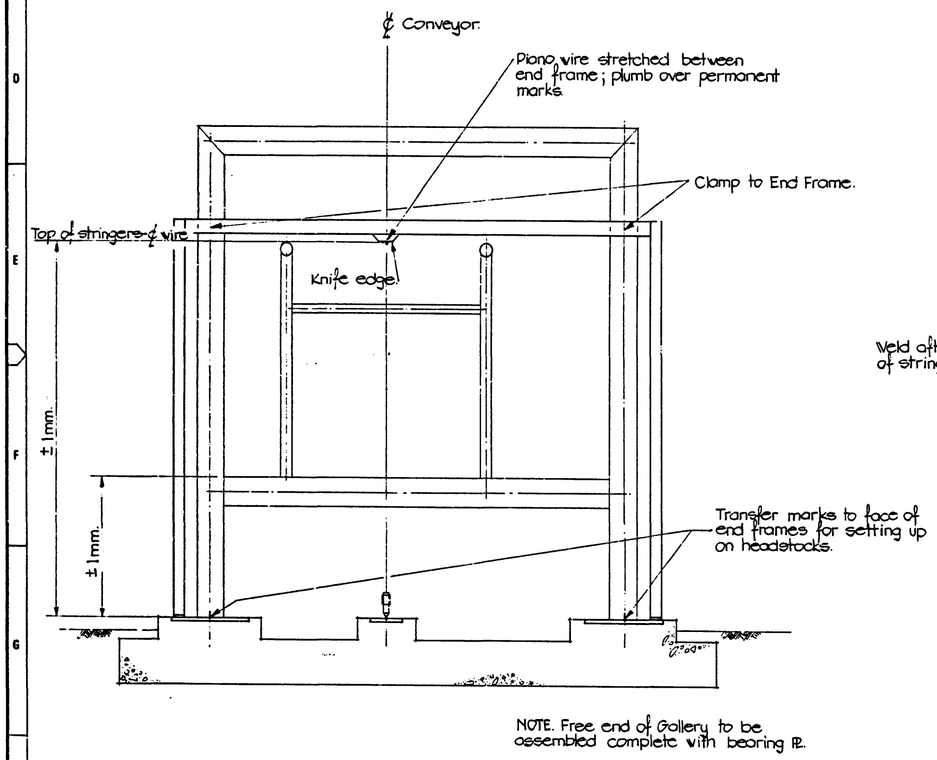

ELEVATION – END OF ASSEMBLY JIG.
Scale. 1:20.

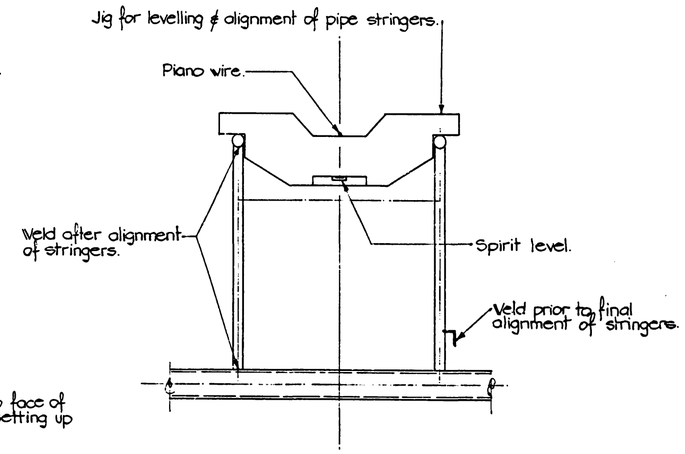

TYPICAL SECTION.
Scale. 1:20.

GENERAL PROCEDURE.

ON SHORE

1. Complete fabrication ℄ welding of all side trusses ℄ interconnecting top ℄ bottom chord bracing ℄ beams.
2. Align gallery on prepared base ℄ assemble ℄ clamp jigs for conveyor stringers at each end frame.
3. Plumb piano wire over permanent conveyor centre marks, assemble, level, align ℄ weld. stringers ℄ supports using piano wire ℄ jig.
4. Transfer 4 No permanent marks from base to faces of end frames.
5. Remove gallery from assembly jig, sandblast ℄ paint.
6. Assemble idlers, aluminium flooring, purlins ℄ girts, cladding etc. ready for erection on headstocks.

OFF SHORE.

1. Set up gallery on headstock shoes such that marks on headstocks ℄ end frames are in alignment.
2. Adjust gallery to final specified level by packing legs where necessary to compensate for level of headstocks.
3. Site weld all round as detailed. Note: final site welding at any headstock should not be carried out until the following criteria are met:-
   (a) Both adjacent galleries are erected.
   (b) Both adjacent roadway girders ℄ deck slabs have been erected.
   (c) Erection cranes ℄ equipment are at least 2-spans forward.

Refer Erection Procedures in specification.

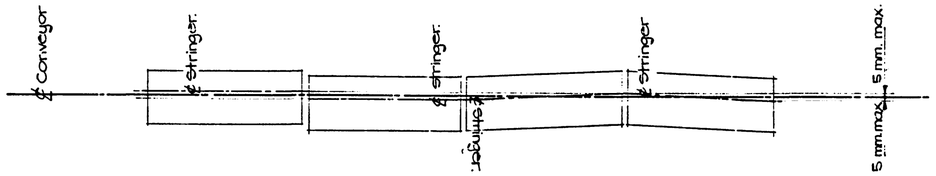

ERECTION TOLERANCES BETWEEN ADJACENT SPANS.

RECOMMENDED PROCEDURES TO BE ADOPTED TO ACHIEVE REQ'D 'CONVEYOR TOLERANCES.'

THE CORPORATION OF THE TREASURER OF QUEENSLAND

No.	DATE	AMENDMENTS

C S R REFERENCE No.

THE SUGAR BOARD
BULK SUGAR TERMINALS

SCALES As Shown
DRAWN R. G. HOLMES
PASSED MMG.
DATE AUG 70.

B.S.T. LUCINDA STAGE III
APPROACH JETTY.
GALLERY TOLERANCES.

DRAWING No. CTQ1122/S/023

MACDONALD WAGNER & PRIDDLE PTY. LTD.
CONSULTING ENGINEERS 213 ST PAULS TERRACE, FORTITUDE VALLEY, QLD 4006 PH 32 7122
IN ASSOCIATION WITH
CSR LIMITED

Docusign Envelope ID: EFC52467-A2A0-4DE2-91D5-216F30602930

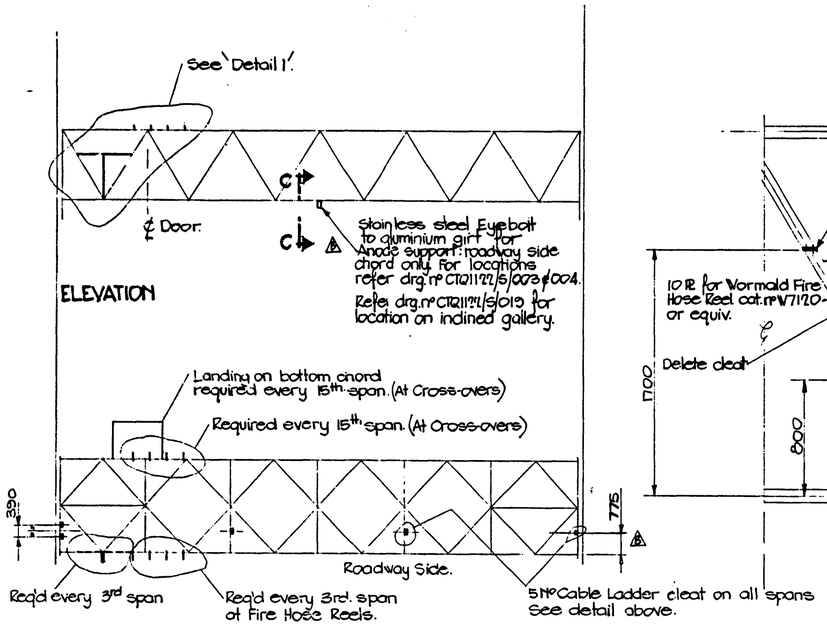

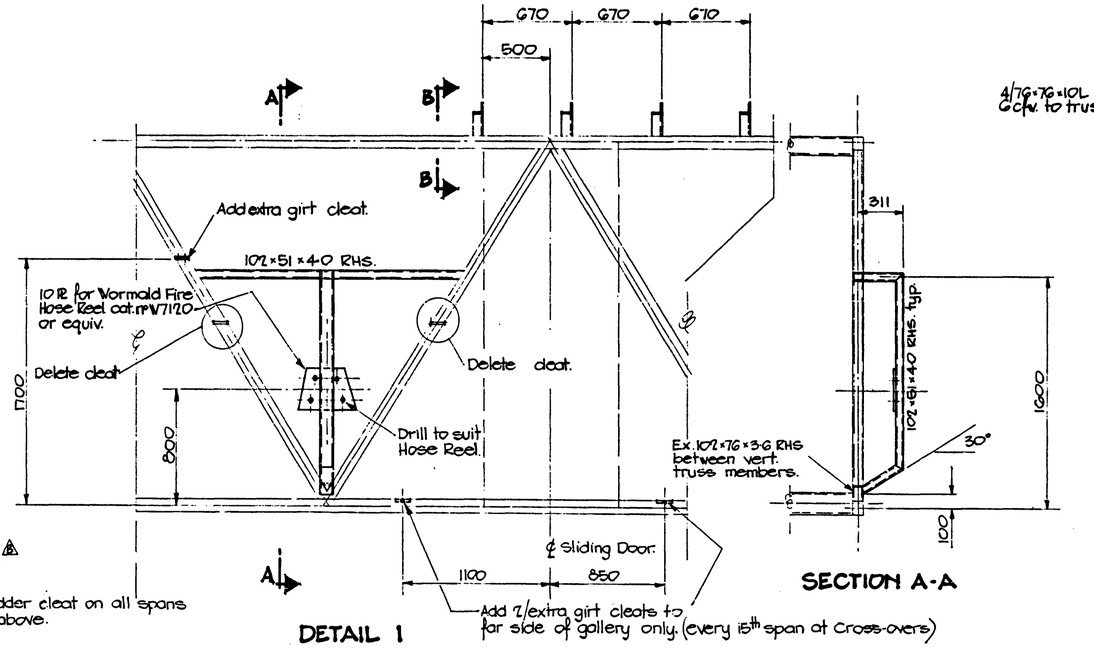

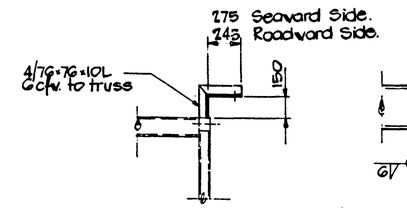

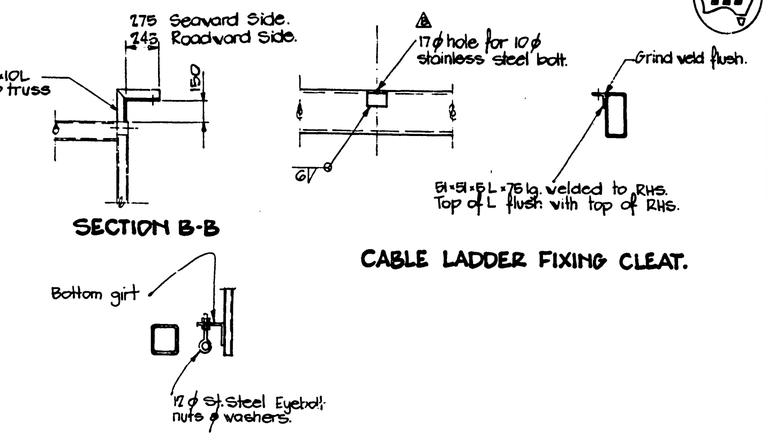

VARIATIONS TO STANDARD TRUSS

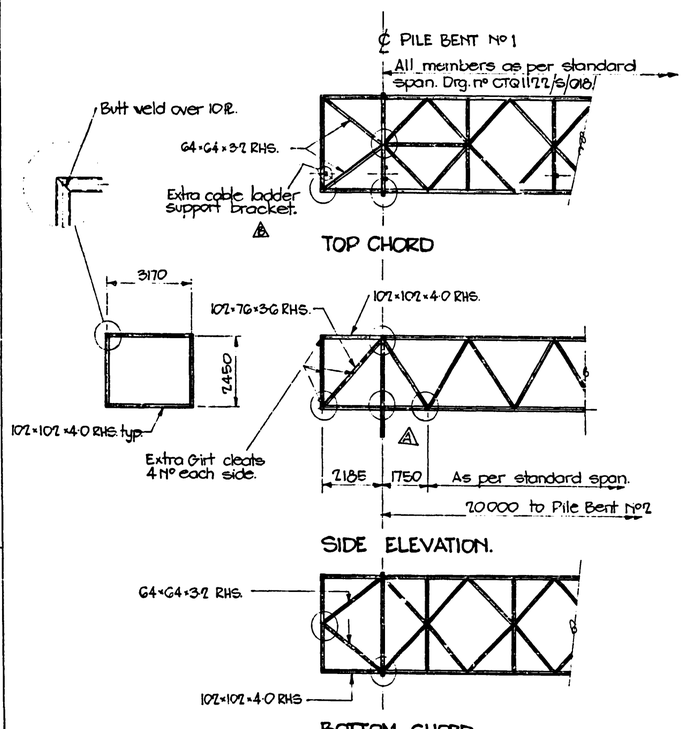

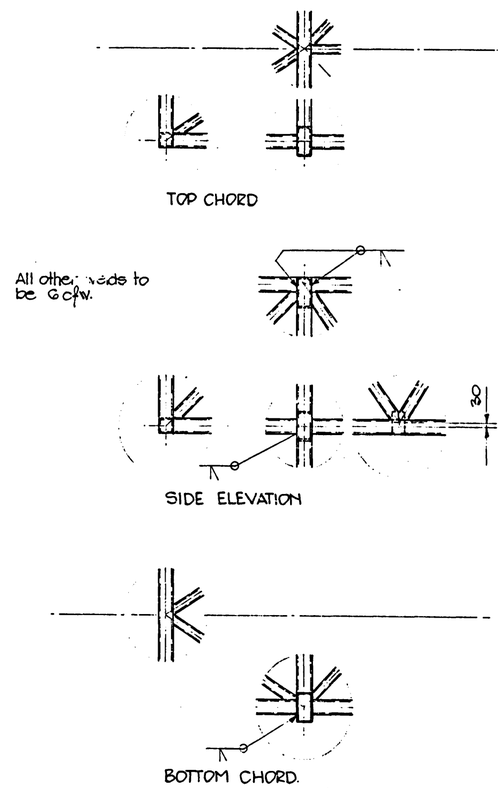

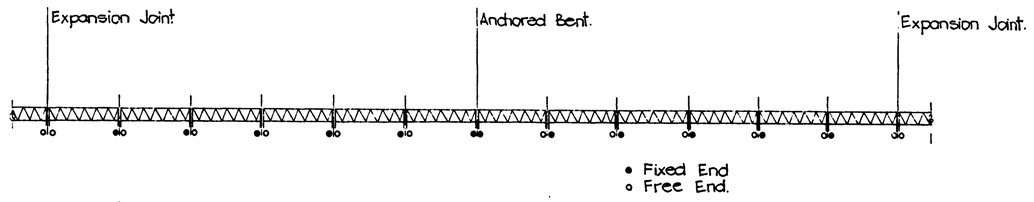

LAYOUT SHOWING FIXING PATTERN FOR GALLERIES.

For location of Anchored bents & expansion joints – Refer drg. nº CTQ1122/S/003 & 004.

GENERAL NOTES.

1. All exposed corners to be ground smooth to a min. radius of 1 mm.
2. Welding, grinding & alignment of the entire gallery section & conv. stringers to be completed prior to commencement of surface preparations & painting.
3. Final painting of structure to be completed prior to the installation of aluminium girts, purlins, floors, cladding, cable trays etc.

FABRICATION NOTES.

CHORDS.
Butt welds in all 10℄ × 10℄ RHS to be qualified complete penetration butt welds made over an internal backing ring. Butt welds to be located not more than 500mm from the intersection of 10℄ × 76 web diagonals & will be permitted only outside the middle third of the truss spans.

SIDE WEB MEMBERS.
Fillet welds to face of chords – 6mm. cont.
Welds to edge of chords – Detail 1 drg. nº CTQ1122/S/018
Welds at intersection of web members – Detail 1 drg. nº CTQ1122/S/018
Grind flush where necessary to permit assembly of top & bottom chord cross members.

TOP & BOTTOM CHORD CROSS MEMBERS.
Welds to faces of side trusses – 6mm. cont. fillet.
Weld to edges of top & bottom chord – Detail 1 drg. nº CTQ1122/S/018

TOP & BOTTOM CHORD BRACING
Cont. 5 mm. fillet to all connections except where welds are made to the exposed thickness of members, weld size shall be limited to the member thickness.

END FRAMES.
For welding of corners refer Detail 2 drg. nº CTQ1122/S/018

GENERAL
All RHS shall conform to AS1163, Gd. 250 & shall to be free from all oil or paint during fabrication. Ends of all members shall be saw cut. Incorrect fit-up at joints will subject the member to rejection by the Engineer. Alternatively, the Engineer may require fillet weld sizes to be increased to compensate for incorrect fill-up at joints. Refer Specification.

VARIATIONS TO TAIL END TRUSS.

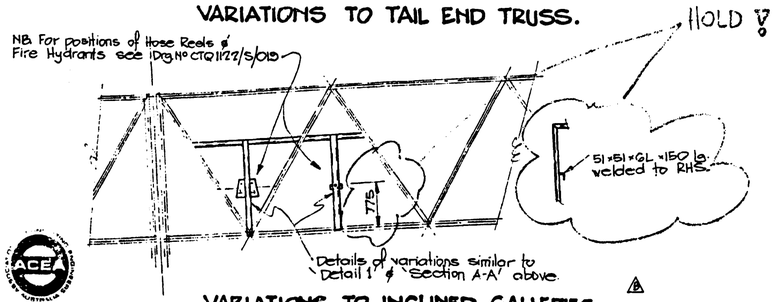

VARIATIONS TO INCLINED GALLERIES.

WELD DETAILS.

NOTE: All other details as per standard truss Drg. nº CTQ1122/S/018

Nº	DATE	AMENDMENTS
A	4·1·77	Diagonal brace omitted.
B	24·2·77	HOLE DIA. ALTERED. EXTRA BRACKETS ADDED. VARIATIONS TO INCLINED GALLERIES ADDED.

C.S.R. REFERENCE Nº.

THE CORPORATION OF THE TREASURER OF QUEENSLAND

THE SUGAR BOARD
BULK SUGAR TERMINALS

SCALES 1:100 1:20
DRAWN R.G. HOLMES
PASSED
DATE AUG '76

B.S.T. LUCINDA STAGE III
APPROACH JETTY.
VARIATIONS TO STD. GALLERY

DRAWING Nº CTQ1122/S/024 A B

MACDONALD WAGNER & PRIDDLE PTY. LTD.
CONSULTING ENGINEERS 213 ST. PAULS TERRACE FORTITUDE VALLEY, QLD. 4006 PH 52 7122
IN ASSOCIATION WITH
C.S.R. LIMITED

Docusign Envelope ID: EFC52467-A2A0-4DE2-91D5-216F30602930

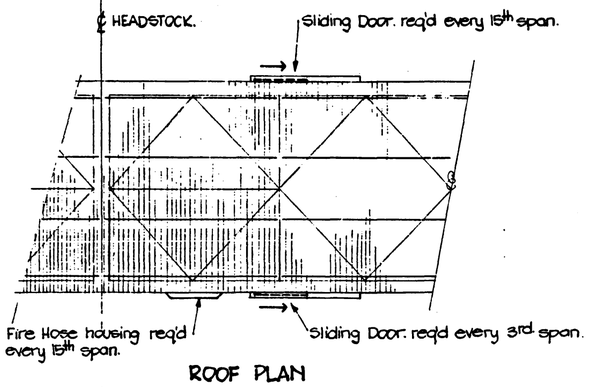

ROOF PLAN

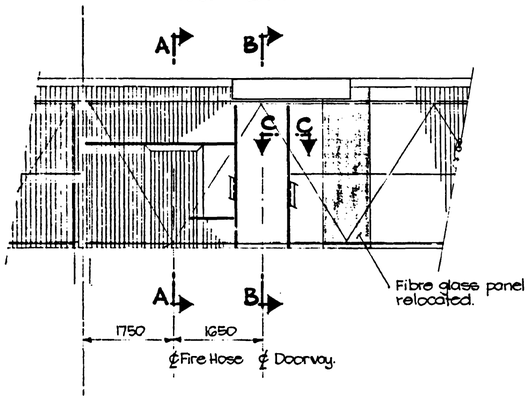

SIDE ELEVATION. (ROADWAY SIDE)

VARIATIONS TO STANDARD TRUSS.

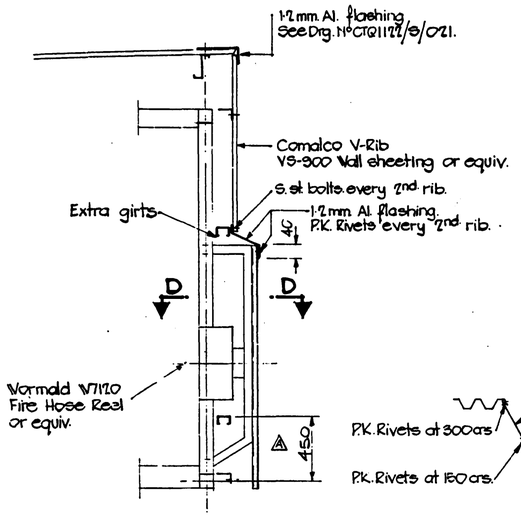

SECTION A-A

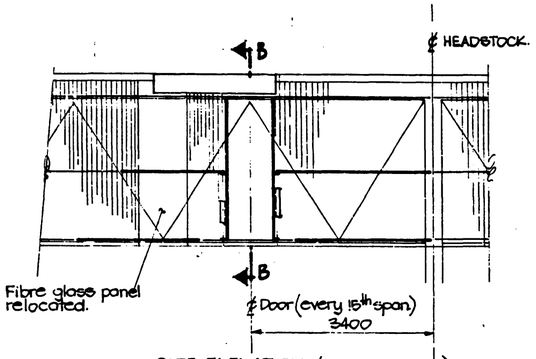

SIDE ELEVATION (NORTHERN SIDE)

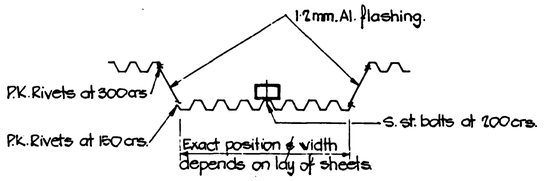

SECTION D-D.

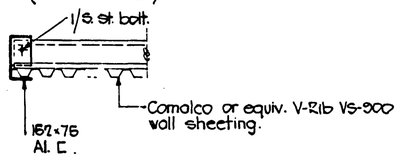

SECTION C-C.

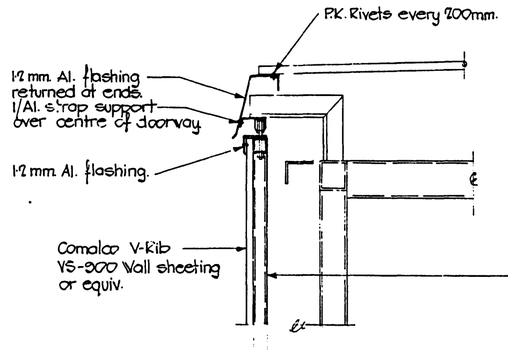

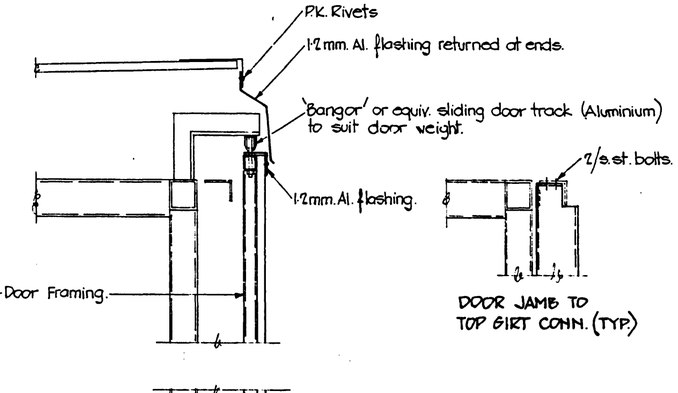

DOOR JAMB TO TOP GIRT CONN. (TYP.)

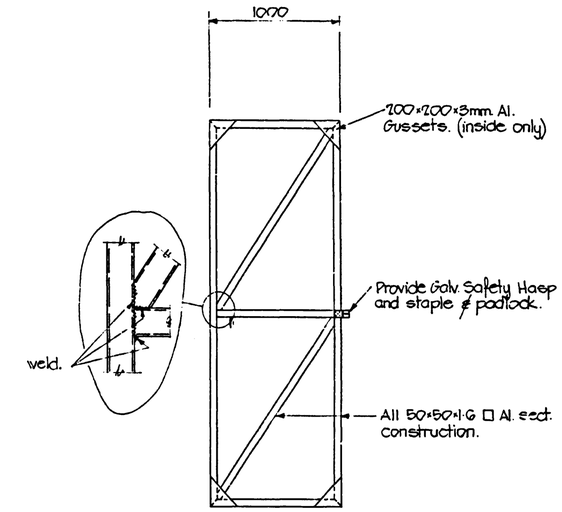

AL. SLIDING DOOR (INSIDE VIEW.)

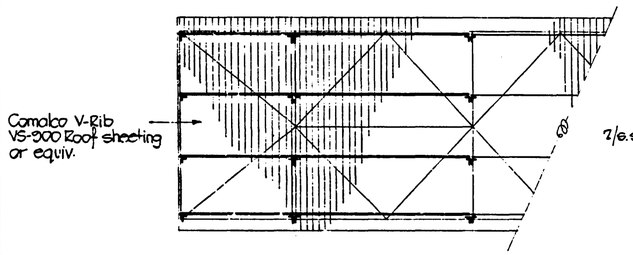

ROOF PLAN.

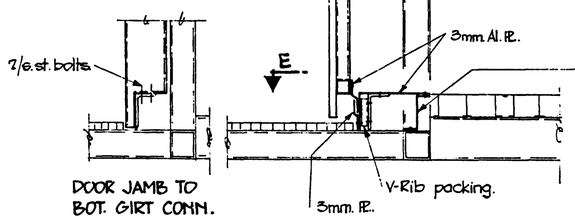

DOOR JAMB TO BOT. GIRT CONN.

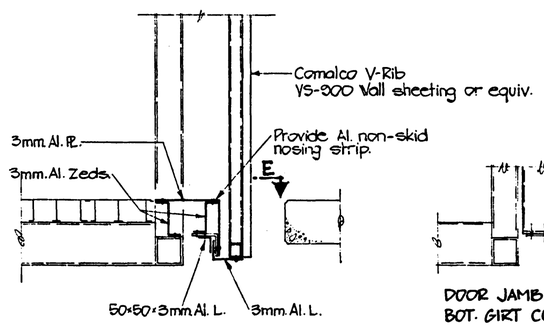

SECTION B-B

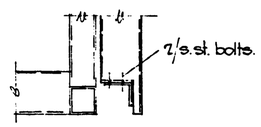

DOOR JAMB TO BOT. GIRT CONN.

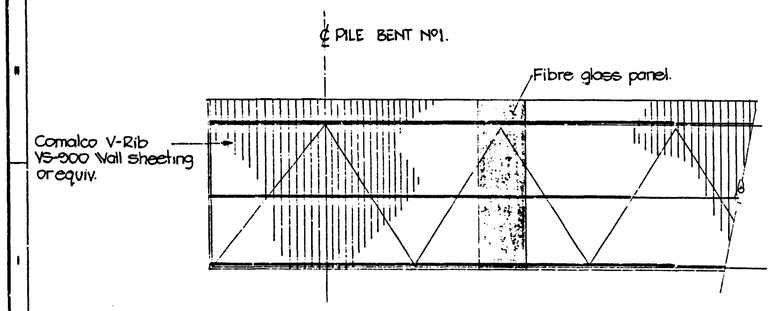

SIDE ELEVATION.

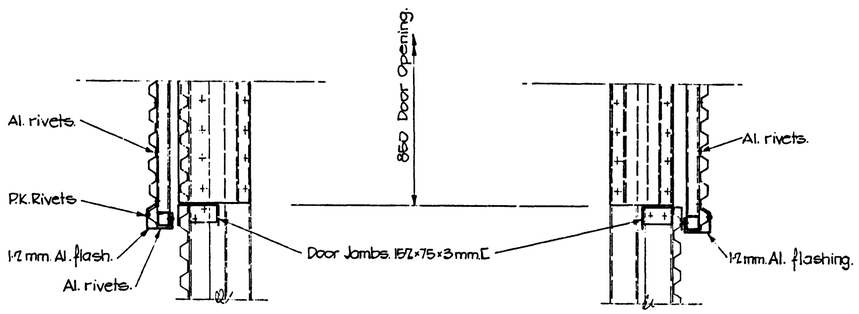

PLAN SECT. E-E.

VARIATIONS TO TAIL END TRUSS.

THE CORPORATION OF THE TREASURER OF QUEENSLAND

No.	DATE	AMENDMENTS
A	28·2·77	EXTRA GIRT ADDED.

C.S.R. REFERENCE No.

THE SUGAR BOARD
BULK SUGAR TERMINALS

SCALES 1:50
DRAWN R.G. HOLMES
PASSED
DATE AUG.

B.S.T. LUCINDA STAGE III
APPROACH JETTY
VARIATIONS TO CLADDING.

DRAWING No. CTQ1122/S/025 A

MACDONALD WAGNER & PRIDDLE PTY. LTD.
CONSULTING ENGINEERS 213 St. PAUL'S TERRACE FORTITUDE VALLEY, Qld 4006 PH 52 7122
IN ASSOCIATION WITH
C.S.R. LIMITED

Docusign Envelope ID: EFC52467-A2A0-4DE2-91D5-216F30602930

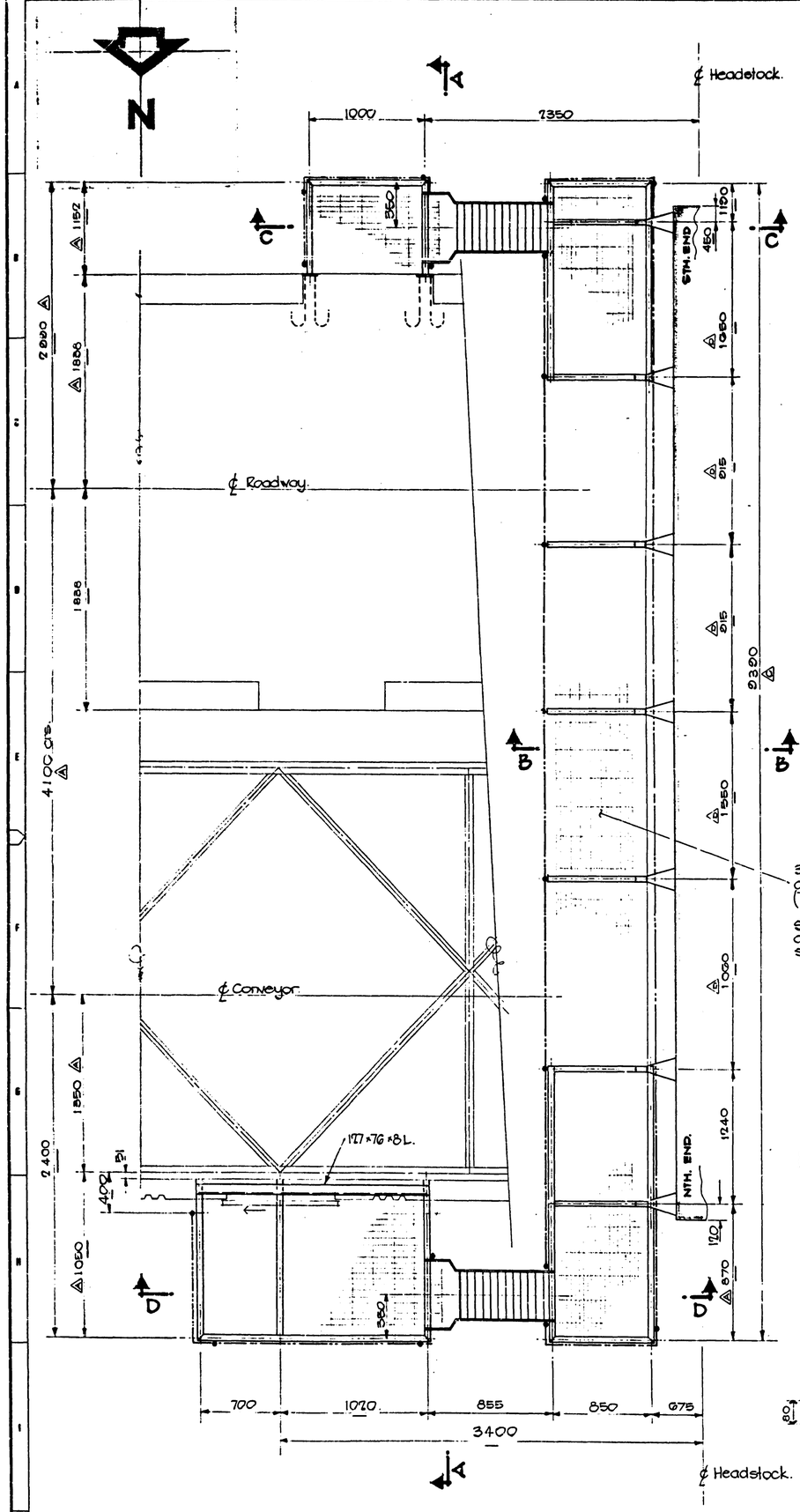

PLAN ON CROSS-OVER.

For locations refer 'Super Structure Layout Sh. i of 2'.

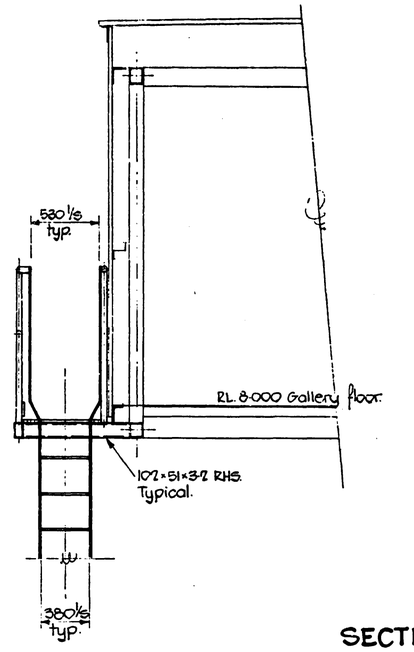

SECTION A-A

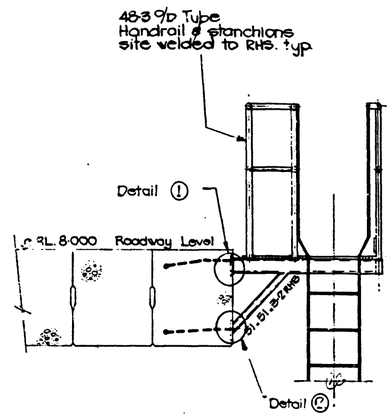

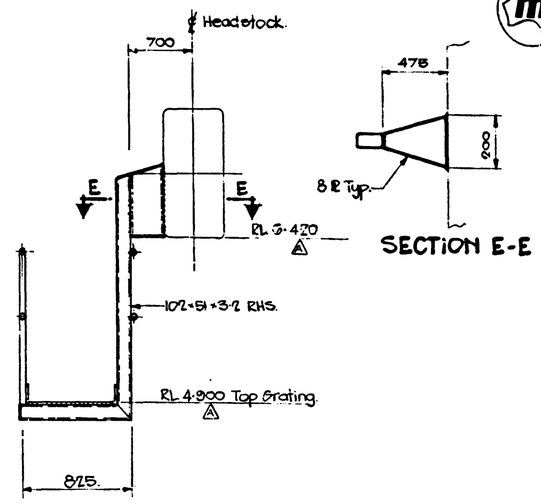

SECTION E-E

SECTION B-B

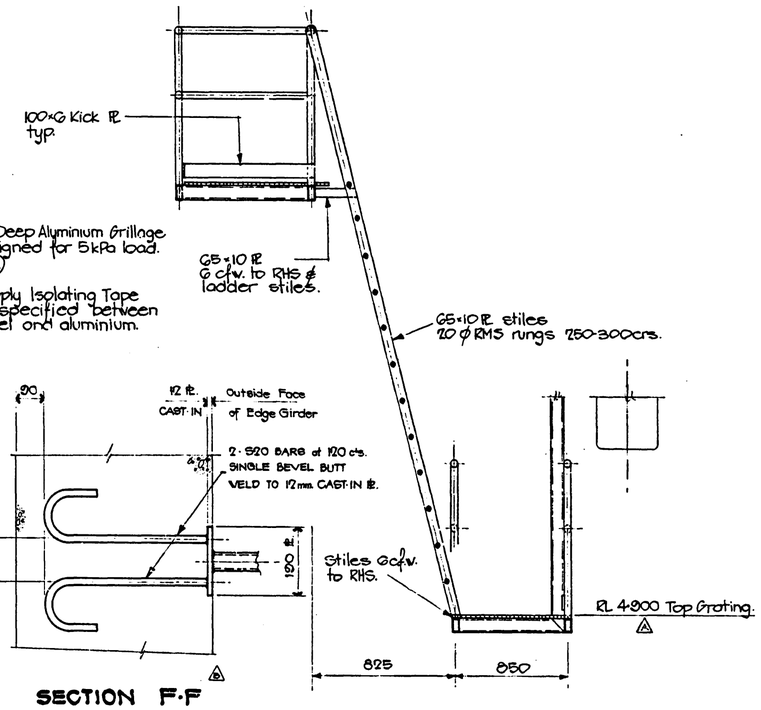

SECTION C-C.

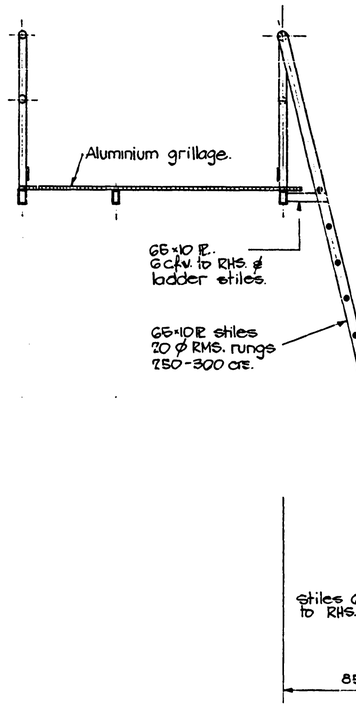

SECTION D-D

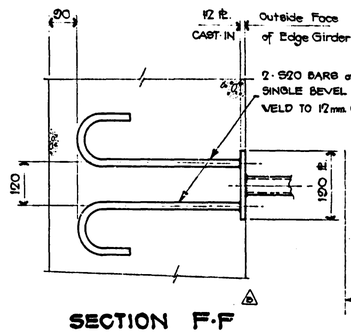

SECTION F-F

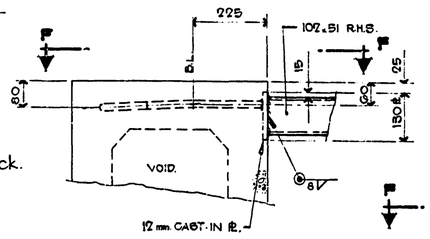

DETAIL 1

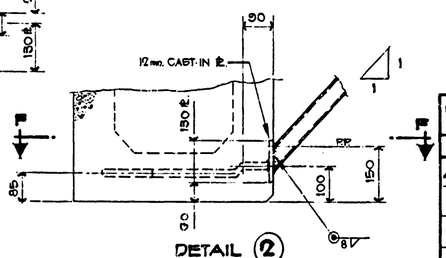

DETAIL 2

THE CORPORATION OF THE TREASURER OF QUEENSLAND			
Nº	DATE	AMENDMENTS	
A	20-1-77	Drg. revised for conc. roadway girder design.	
B	9-2-77	Details 1 & 2 amended for Cast-in PL. with Tendons. Section F-F added.	
C	26-5-77	O/A DIMENSION ALTERED.	
D	28-10-77	Walkway Hangers Relocated.	
E	27-10-77	Walkway Hangers Extended to clear Piles at extreme toleranced position	
C.S.R. REFERENCE Nº.			

THE SUGAR BOARD
BULK SUGAR TERMINALS

SCALES 1:20
DRAWN R. C. HOLMES.
PASSED
DATE AUG. 76.

B.S.T. LUCINDA STAGE III
APPROACH JETTY
CROSS-OVER DETAILS.

DRAWING Nº
CTQ1122/S/026
E

MACDONALD WAGNER & PRIDDLE PTY. LTD.
CONSULTING ENGINEERS 213 ST PAULS TERRACE, FORTITUDE VALLEY, QLD 4006. PH 52 7122
IN ASSOCIATION WITH
C.S.R. LIMITED

Docusign Envelope ID: EFC52467-A2A0-4DE2-91D5-216F30602930

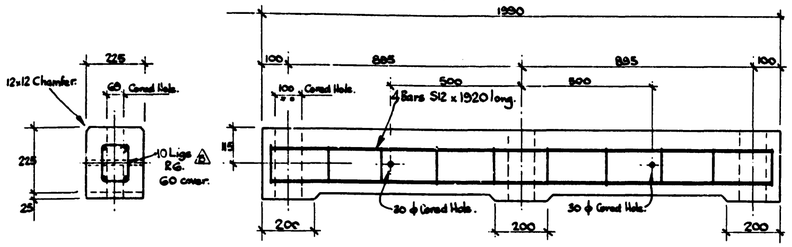

STANDARD KERB UNIT.

1:10.

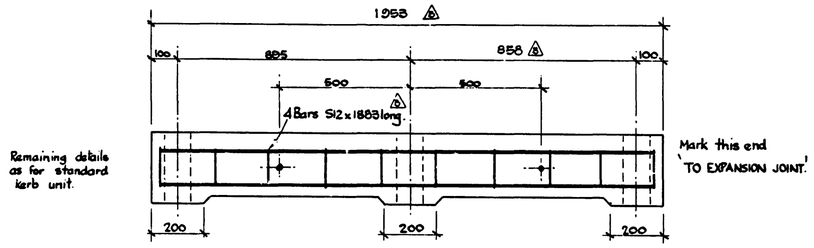

KERB UNIT AT EXPANSION JOINT.

1:10.

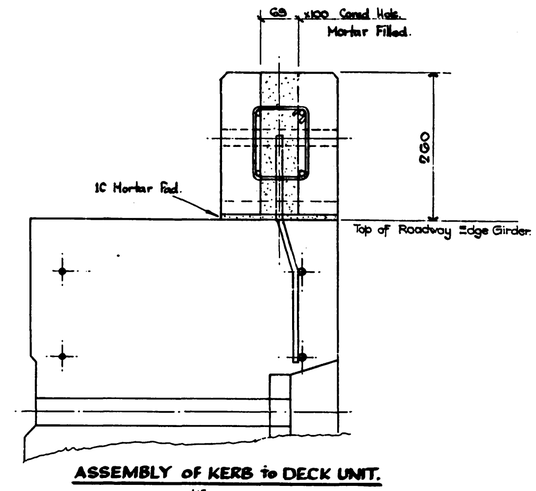

ASSEMBLY of KERB to DECK UNIT.

1:5.

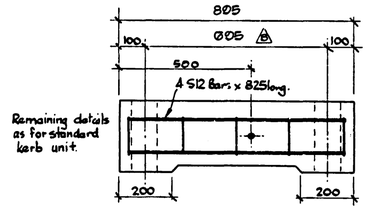

DOORWAY KERB.

1:10.

Bay No	Type	Bay No	Type	Bay No	Type	Bay No	Type	Bay No	Type	Bay No	Type
1	Ramp	51	Standard	101	Doorway	151	Expansion	201	Standard	251	Doorway
2	Doorway	52	Standard	102	Expansion	152	Crossover/Door	202	Standard	252	Standard
3	Standard	53	Doorway	103	Expansion	153	Standard	203	Doorway	253	Standard
4	Standard	54	Expansion	104	Doorway	154	Standard	204	Expansion	254	Expansion/Door
5	Doorway	55	Expansion	105	Standard	155	Doorway	205	Expansion	255	Expansion
6	Expansion	56	Doorway	106	Standard	156	Passing	206	Doorway	256	Standard
7	Expansion	57	Standard	107	Crossover/Door	157	Standard	207	Standard	257	Crossover/Door
8	Doorway	58	Standard	108	Passing	158	Doorway	208	Standard	258	Standard
9	Standard	59	Doorway	109	Standard	159	Standard	209	Doorway	259	Standard
10	Standard	60	Passing	110	Doorway	160	Standard	210	Standard	260	Doorway
11	Doorway	61	Standard	111	Standard	161	Doorway	211	Standard	261	Standard
12	Standard	62	Crossover/Door	112	Standard	162	Expansion	212	Exp/Cross/Door	262	Standard
13	Standard	63	Standard	113	Doorway	163	Expansion	213	Expansion	263	Doorway
14	Doorway	64	Standard	114	Expansion	164	Doorway	214	Standard	264	Standard
15	Standard	65	Doorway	115	Expansion	165	Standard	215	Doorway	265	Standard
16	Standard	66	Expansion	116	Doorway	166	Standard	216	Standard	266	Expansion/Door
17	Crossover/Door	67	Expansion	117	Standard	167	Crossover/Door	217	Standard	267	Expansion
18	Expansion	68	Doorway	118	Standard	168	Standard	218	Doorway	268	Standard
19	Expansion	69	Standard	119	Doorway	169	Standard	219	Standard	269	Doorway
20	Doorway	70	Standard	120	Standard	170	Doorway	220	Expansion	270	Standard
21	Standard	71	Doorway	121	Standard	171	Standard	221	Expansion/Door	271	Standard
22	Standard	72	Standard	122	Crossover/Door	172	Expansion	222	Standard	272	Crossover/Door
23	Doorway	73	Standard	123	Standard	173	Expansion/Door	223	Standard	273	Standard
24	Passing	74	Doorway	124	Standard	174	Standard	224	Doorway	274	Standard
25	Standard	75	Standard	125	Doorway	175	Standard	225	Standard	275	Standard
26	Doorway	76	Standard	126	Expansion	176	Doorway	226	Standard	276	Standard
27	Standard	77	Crossover/Door	127	Expansion	177	Standard	227	Crossover/Door	277	Standard
28	Standard	78	Expansion	128	Doorway	178	Standard	228	Standard	278	Standard
29	Doorway	79	Expansion	129	Standard	179	Doorway	229	Standard	279	Expansion
30	Expansion	80	Doorway	130	Standard	180	Expansion	230	Expansion/Door	280	Expansion
31	Expansion	81	Standard	131	Doorway	181	Expansion	231	Expansion	281	Standard
32	Crossover/Door	82	Standard	132	Standard	182	Crossover/Door	232	Standard	282	Standard
33	Standard	83	Doorway	133	Standard	183	Standard	233	Doorway	283	Standard
34	Standard	84	Standard	134	Doorway	184	Standard	234	Standard	284	Special
35	Doorway	85	Standard	135	Standard	185	Doorway	235	Standard		
36	Standard	86	Doorway	136	Standard	186	Standard	236	Doorway		
37	Standard	87	Standard	137	Crossover/Door	187	Standard	237	Standard		
38	Doorway	88	Standard	138	Expansion	188	Expansion/Door	238	Standard		
39	Standard	89	Doorway	139	Expansion	189	Expansion	239	Doorway		
40	Standard	90	Expansion	140	Doorway	190	Standard	240	Standard		
41	Doorway	91	Expansion	141	Standard	191	Doorway	241	Standard		
42	Expansion	92	Crossover/Door	142	Standard	192	Standard	242	Exp/Cross/Door		
43	Expansion	93	Standard	143	Doorway	193	Standard	243	Expansion		
44	Doorway	94	Standard	144	Standard	194	Crossover/Door	244	Standard		
45	Standard	95	Doorway	145	Standard	195	Standard	245	Doorway		
46	Standard	96	Standard	146	Doorway	196	Expansion	246	Standard		
47	Crossover/Door	97	Standard	147	Standard	197	Expansion/Door	247	Standard		
48	Standard	98	Doorway	148	Standard	198	Standard	248	Passing/Door		
49	Standard	99	Standard	149	Doorway	199	Standard	249	Standard		
50	Doorway	100	Standard	150	Expansion	200	Passing/Door	250	Standard		

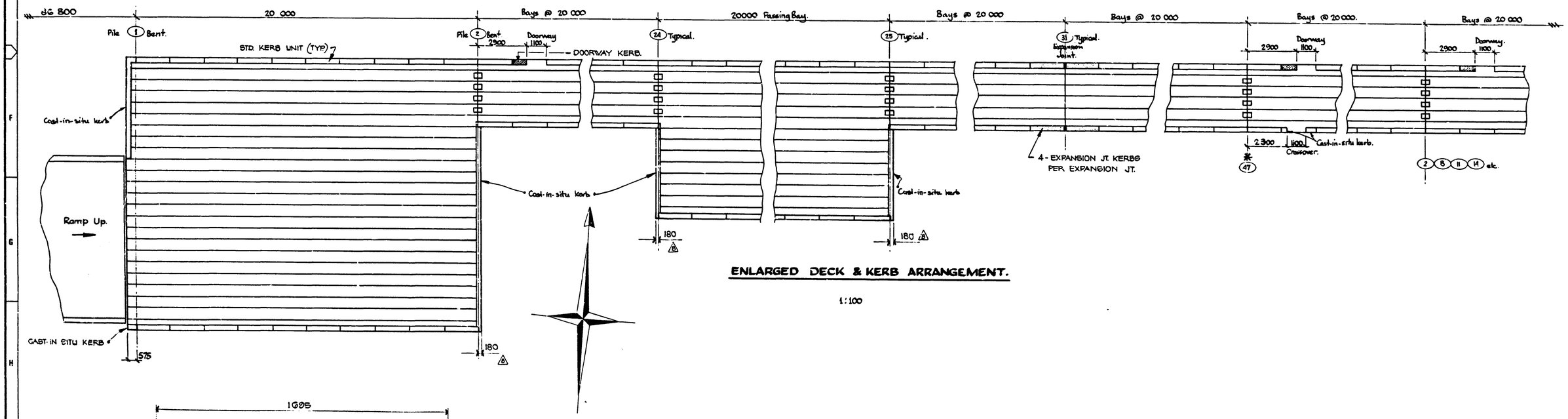

ENLARGED DECK & KERB ARRANGEMENT.

1:100

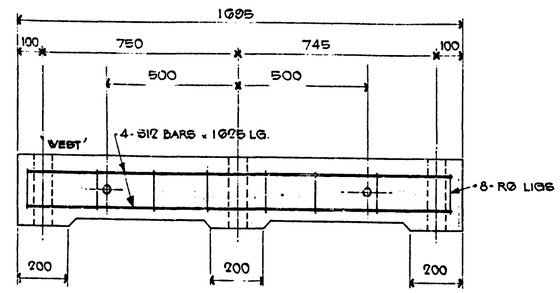

SPECIAL KERB UNIT.

FOR PILE BENT No 284 ONLY.

1:10

NOTES:

1. CONCRETE: Reinforced kerb Units. $F_c' = 25$ MPa. Max. agg. size = 20 mm.
2. FOR LAYOUT OF APPROACH JETTY - REFER DRGS. CTQ 11122/S/003 & 004.

No.	DATE	AMENDMENTS
A	29.11.76	BAY Nos. 18 & 19 NOW EXPANSION TYPE.
B	16.12.77	Drawing amended.

CSR REFERENCE No.

THE CORPORATION OF THE TREASURER OF QUEENSLAND

THE SUGAR BOARD
BULK SUGAR TERMINALS

SCALES As Shown
DRAWN Wheeley
PASSED
DATE 20.8.76

B.S.T. LUCINDA - STAGE III.
OFFSHORE LOADING FACILITY.
ALTERNATE PRECAST ROADWAY.
GENERAL ARRANGEMENT.

DRAWING No. CTQ11122/S/030 B

MACDONALD WAGNER & PRIDDLE PTY. LTD.
CONSULTING ENGINEERS 313 ST PAULS TERRACE, FORTITUDE VALLEY, QLD 4006 PH 52 7133
IN ASSOCIATION WITH
CSR LIMITED

Docusign Envelope ID: EFC52467-A2A0-4DE2-91D5-216F30602930

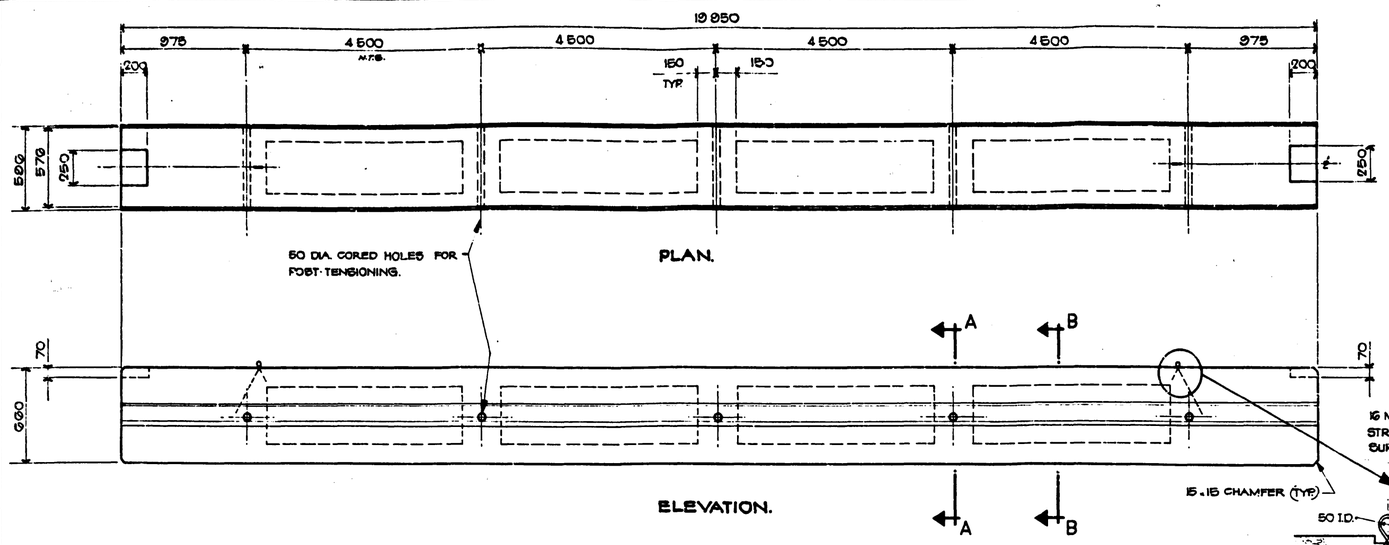

STANDARD GIRDER.

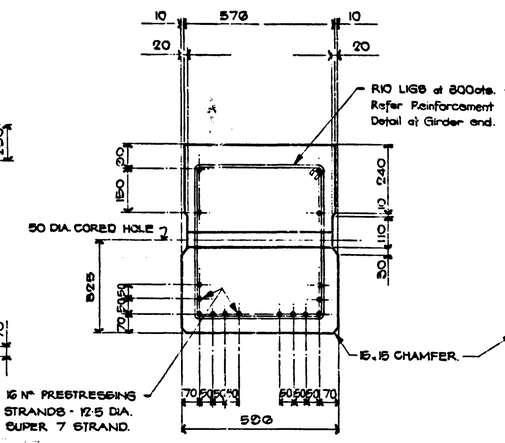

SECTION A-A
1:10

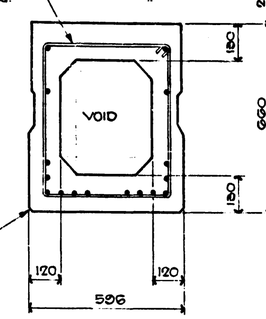

SECTION B-B
1:10

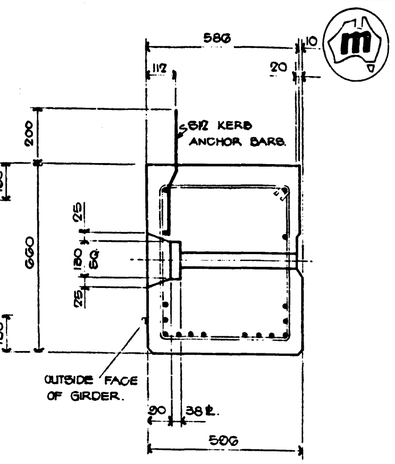

SECTION C-C
1:10

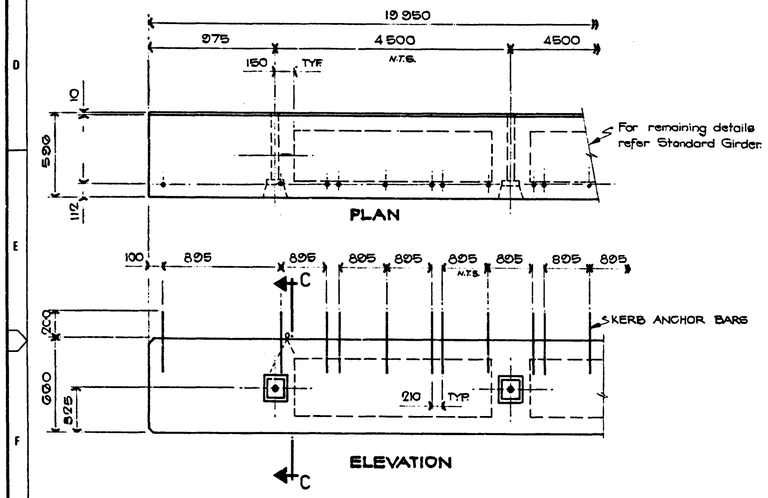

EDGE GIRDER.

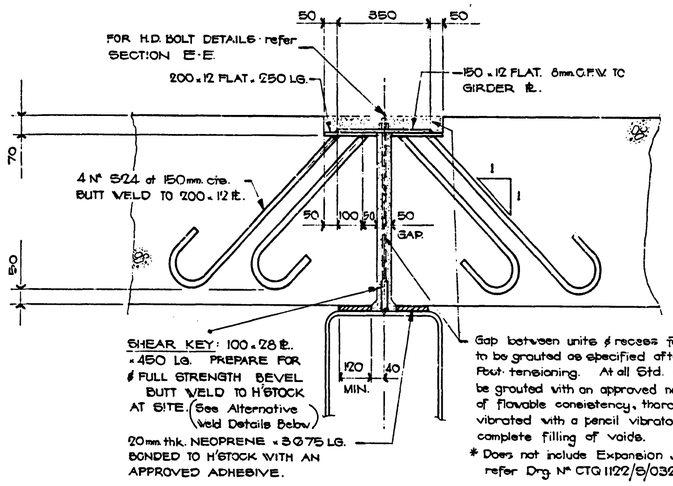

SECTION D-D
1:10

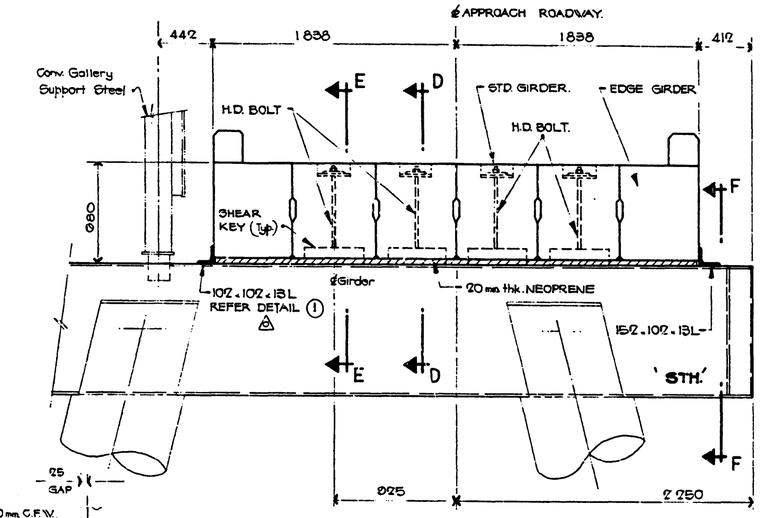

ELEVATION OF STANDARD JOINT.

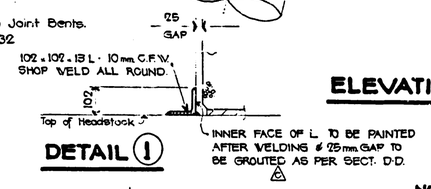

DETAIL 1

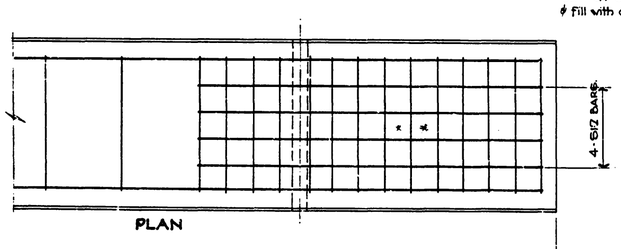

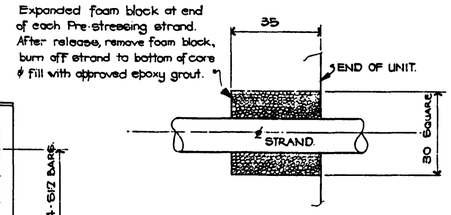

DETAIL AT STRAND END

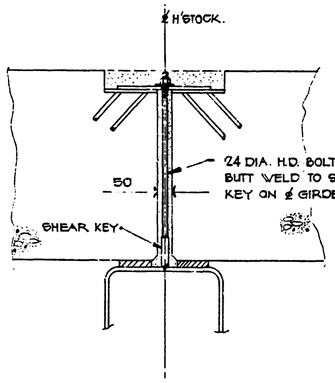

Remaining details as for Section D-D.

SECTION E-E

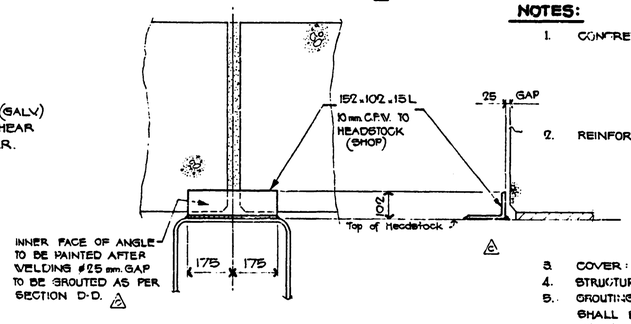

SECTION F-F
1:10

NOTES:

1. CONCRETE : PRESTRESSED DECK UNITS.
   $F_c' = 45$ MPa at 28 DAYS
   $F_{cp} = 35$ MPa at TRANSFER
   REINFORCED KERB UNITS.
   $F_c' = 25$ MPa
   MAX. AGGREGATE SIZE = 20 mm.
2. REINFORCEMENT : TENDONS — 7 Wire super grade stress relieved strands, 12.5 mm. Dia. to AS.1311-1972. Intial prestressing load/strand after allowance for jacking losses shall be 140 kN.
   POST-TENSIONING BAR — 26 mm. DIA. super grade bar to AS. 1311-1972.
   REINFORCING BAR — structural grade bar to AS. 1302.
3. COVER : CLEAR COVER TO M.S. LIGS = 50 mm. U.N.O.
4. STRUCTURAL TOLERANCES : AS SPECIFIED.
5. GROUTING OF THE 50 mm. GAP ℄ RECESS AT STANDARD JOINTS SHALL BE PLACED WHEN THE TEMPERATURE IS BETWEEN 10°C ℄ 30°C.
6. FOR EXPANSION JOINT DETAILS - REFER DRG. Nº CTQ 1122/S/032
7. ALL WELDING SHALL BE IN ACCORDANCE WITH AS. 1554-PART 1 1974.

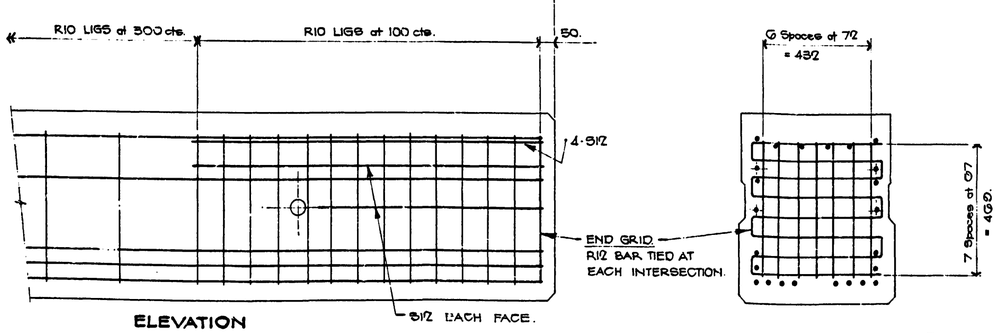

TYP. REINFORCEMENT AT ENDS OF GIRDERS.
1:10

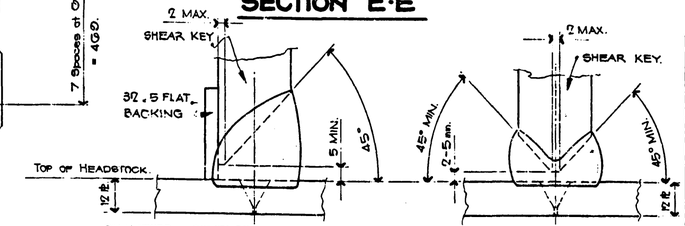

QUALIFIED COMPLETE PENETRATION SINGLE-BEVEL BUTT T WITH BACKING. OR QUALIFIED COMPLETE PENETRATION DOUBLE-BEVEL BUTT WELD.

Nº	DATE	AMENDMENTS
A	10-1-77	Drawing Revised.
B	14-2-77	DETAILS SHEAR KEY WELD ADDED.
C	10-8-77	DETAILS EDGE ANGLES ADDED.
D	19-5-77	SITE WELDING OF 152 L AMENDED TO SHOP WELDING TO SUIT CONTRACTOR.

CSR REFERENCE Nº.

THE CORPORATION OF THE TREASURER OF QUEENSLAND

THE SUGAR BOARD
BULK SUGAR TERMINALS

SCALES 1:20, 1:10
DRAWN J.T.
PASSED
DATE JAN. '77

B.S.T. LUCINDA STAGE III
APPROACH JETTY.
STD. ROADWAY GIRDER DETAILS

DRAWING Nº CTQ 1122/S/031 [redacted] D

MACDONALD WAGNER & PRIDDLE PTY. LTD.
CONSULTING ENGINEERS 213 ST PAUL'S TERRACE, FORTITUDE VALLEY QLD 4006 PH 52 / 23
IN ASSOCIATION WITH
CSR LIMITED

Docusign Envelope ID: EFC52467-A2A0-4DE2-91D5-216F30602930

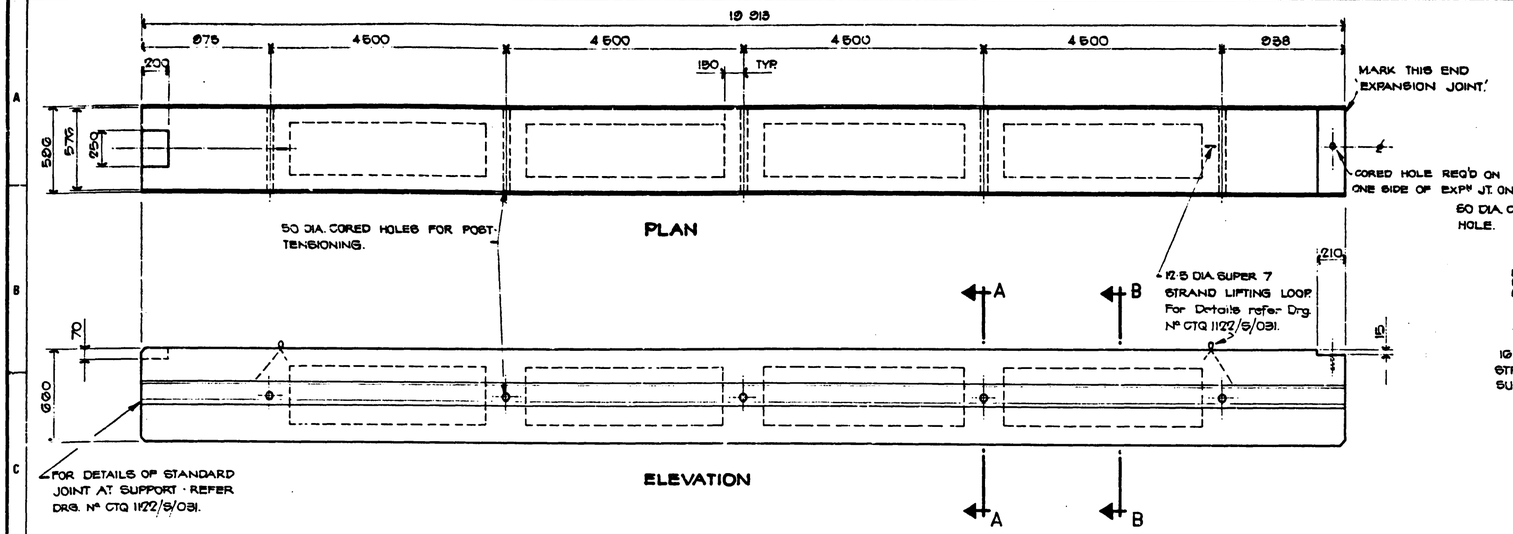

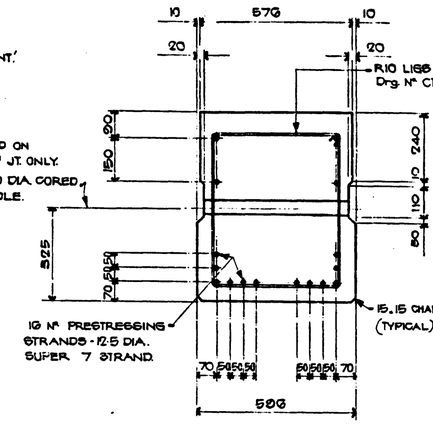

SECTION A-A

1:10

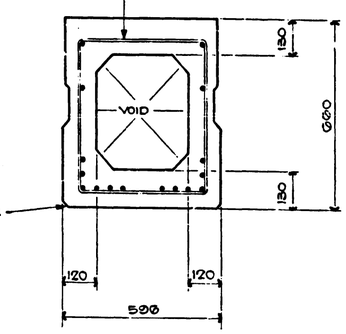

SECTION B-B

1:10

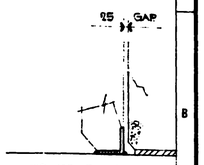

102 × 102 × 13 L. 10 mm C.F.W. TO H'STOCK (SHOP) ALL ROUND. INNER FACE OF VERT. LEG TO BE PAINTED AFTER WELDING. 25 mm GAP TO BE GROUTED.

DETAIL 'H'

1:10

EXPANSION JOINT GIRDER.

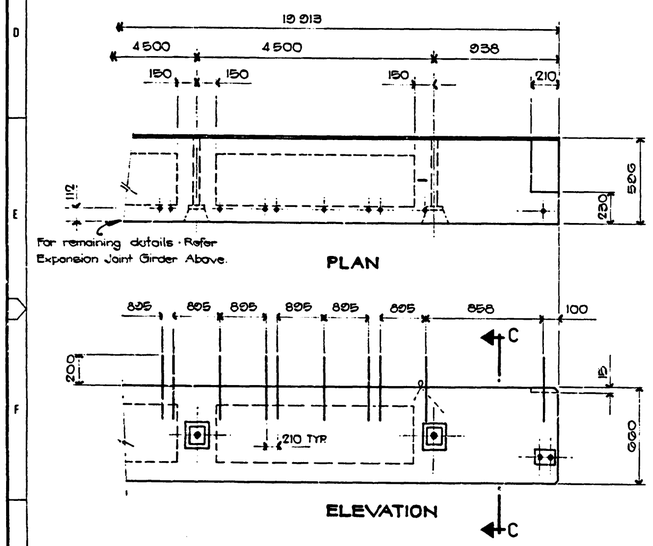

EDGE GIRDER · EXPANSION JT.

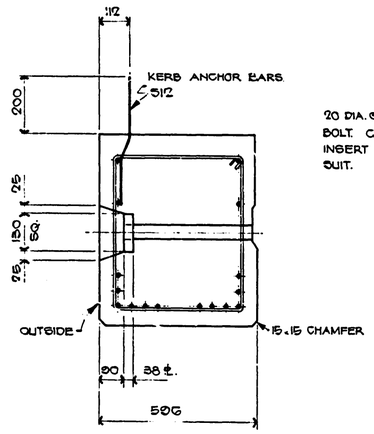

SECTION C-C

1:10

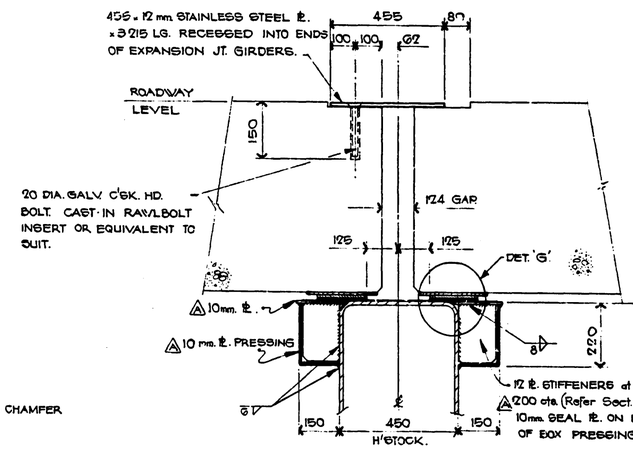

SECTION D-D

1:10

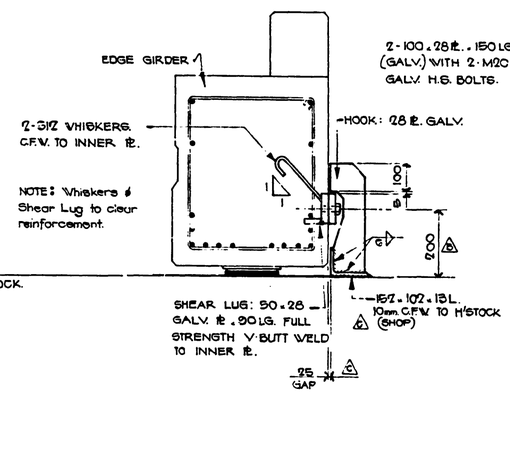

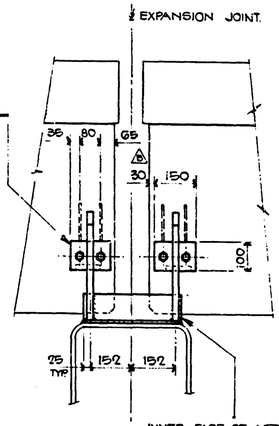

INNER FACE OF VERT. LEG TO BE PAINTED AFTER WELDING & 25 mm GAP GROUTED. Refer Drg. CTQ 1122/S/031

DETAIL 'F'

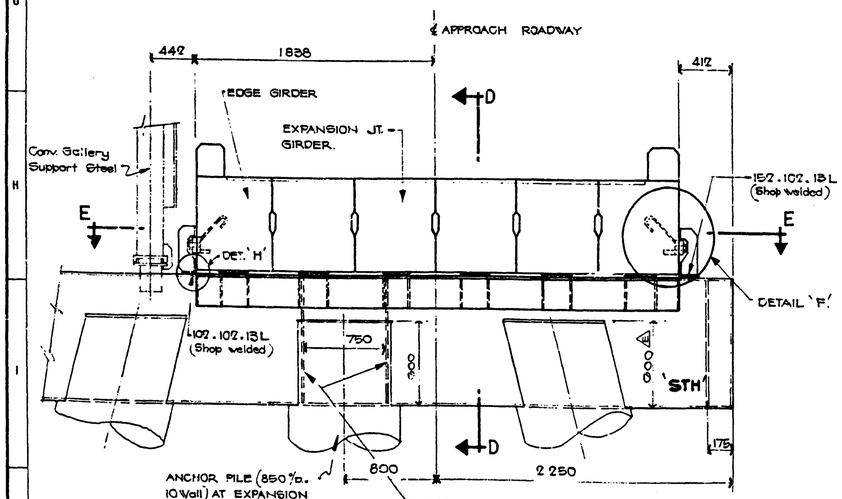

ANCHOR PILE (850 ⌀. 10 Wall) AT EXPANSION JOINTS ONLY. PILE RAKES 1:4 SEAWARDS.

4 - 200 × 12 ℄. STIFFENERS C.F.W. TO INSIDE H'STOCK. Refer CTQ 1122/S/005 for Stiff^N details.

ELEVATION OF EXPANSION JOINT.

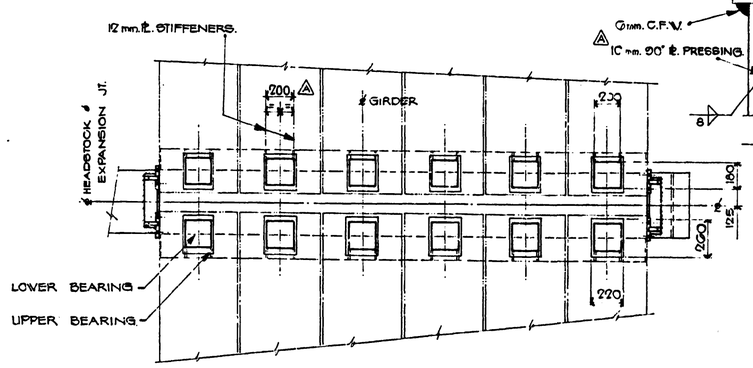

SECTION E-E

BEARING LAYOUT PLAN.

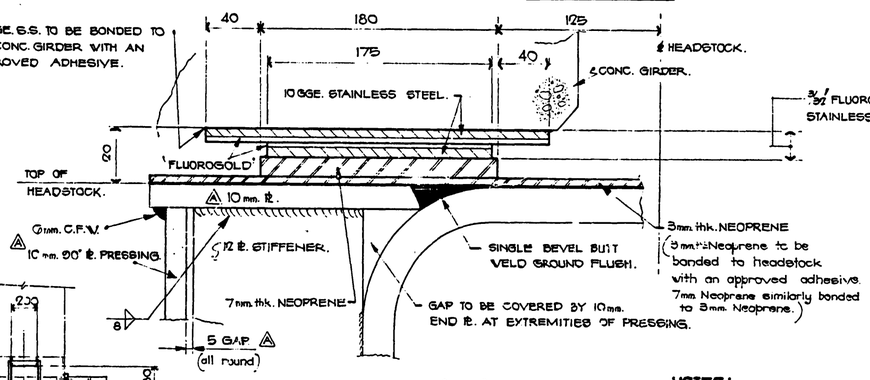

DETAIL 'G'

BEARING DETAIL N.T.S.

NOTES:

- REFER DRG. CTQ 1122/S/031 FOR NOTES 1 to 4.
- REFER DRG. CTQ 1122/S/001 FOR EXPANSION JT. LOCATION.

THE CORPORATION OF THE TREASURER OF QUEENSLAND

Nº	DATE	AMENDMENTS
A	14·2·77	Bearing support amended. Stiffener cts. altered.
B	10·8·77	Detail 'F' dimensional change.
C	10·5·77	Detail 'H' added. Detail 'F' amended.
D	10·5·77	Site Welded 152 L amended to Shop welded to suit Contractor.
E	10·10·77	Pile Height amended on headstock.

C S R REFERENCE Nº.

THE SUGAR BOARD
BULK SUGAR TERMINALS

SCALES 1:20, 1:10
DRAWN J.T.
PASSED
DATE JAN '77

B.S.T. LUCINDA STAGE III
APPROACH JETTY
EXPANSION JOINT DETAILS

DRAWING Nº CTQ1122/S/032 E

MACDONALD WAGNER & PRIDDLE PTY. LTD.
CONSULTING ENGINEERS 313 ST PAUL'S TERRACE, FORTITUDE VALLEY QLD 4006 PH 52 7122
IN ASSOCIATION WITH
CSR LIMITED

Docusign Envelope ID: EFC52467-A2A0-4DE2-91D5-216F30602930

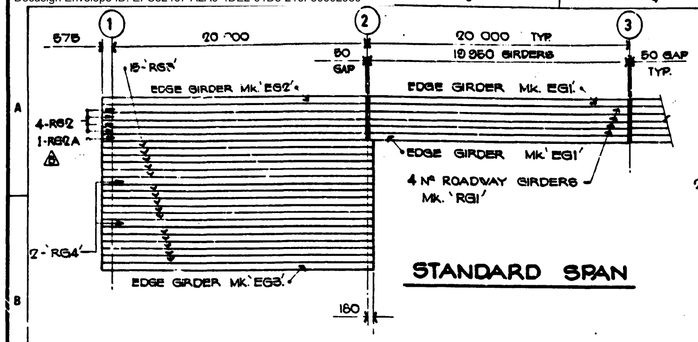

STANDARD SPAN

PILE BENTS 1 & 2

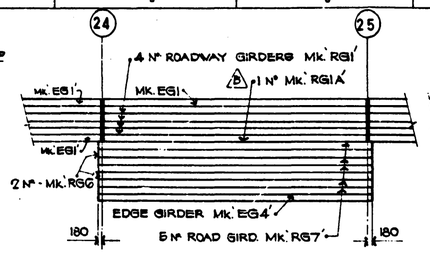

TYP. PASSING BAY

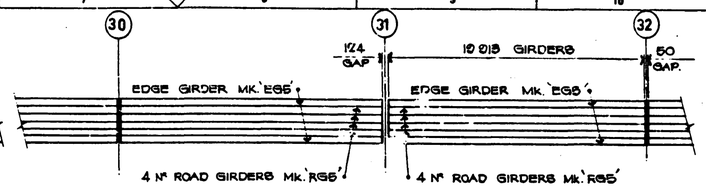

TYP. EXPANSION JOINT

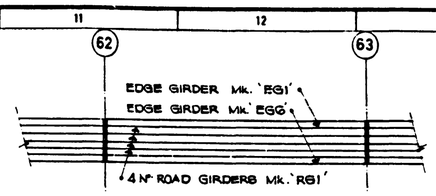

CROSS-OVER FOR STD. SPAN.

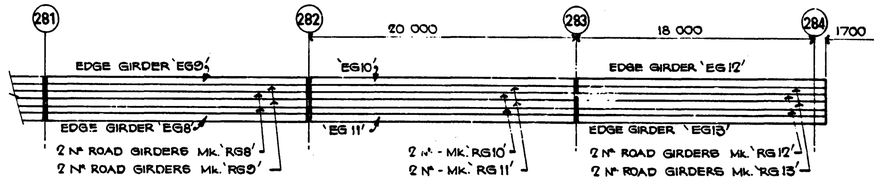

WHARF END BENTS

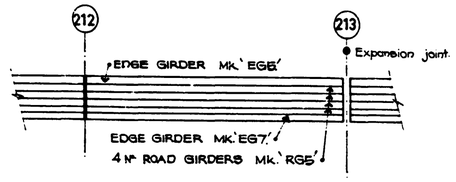

CROSS-OVER FOR EXP. SPAN.

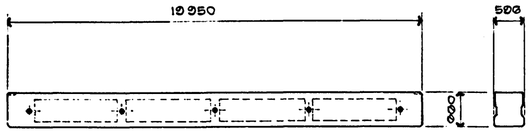

STANDARD CONCRETE ROADWAY GIRDER
MK. 'RG1'

For Remaining Details - refer Drg. Nº CTQ 1122/S/031.

NOTE: NO PLATE & RECESS ON BOTH ENDS REQ'D. FOR Mk. RG1A. ONLY.

Pile Bent Nº	Nº Req'd.
2 to 5	4 x 4 = 16
8 to 17	10 x 4 = 40
20 to 23	4 x 4 = 16
1-'RG1A' 24 (PB)	1 x 5 = 5
25 to 29	5 x 4 = 20
32 to 41	10 x 4 = 40
44 to 53	10 x 4 = 40
56 to 59	4 x 4 = 16
1-'RG1A' 60 (PB)	1 x 5 = 5
61 to 65	5 x 4 = 20
68 to 77	10 x 4 = 40
80 to 89	10 x 4 = 40
92 to 101	10 x 4 = 40
104 to 107	4 x 4 = 16
1-'RG1A' 108 (PB)	1 x 5 = 5
109 to 113	5 x 4 = 20
116 to 125	10 x 4 = 40
128 to 137	10 x 4 = 40
140 to 149	10 x 4 = 40
152 to 155	4 x 4 = 16

Pile Bent Nº	Nº Req'd.	
156 (PB)	1 x 5 = 5	1-'RG1A' (INCLUDED)
157 to 161	5 x 4 = 20	
164 to 171	8 x 4 = 32	
174 to 179	6 x 4 = 24	
182 to 187	6 x 4 = 24	
190 to 195	6 x 4 = 24	
198 & 199	2 x 4 = 8	
200 (PB)	1 x 5 = 5	1-'RG1A'
201 to 203	3 x 4 = 12	
206 to 211	6 x 4 = 24	
214 to 219	6 x 4 = 24	
222 to 229	8 x 4 = 32	
232 to 241	10 x 4 = 40	
244 to 247	4 x 4 = 16	
248 (PB)	1 x 5 = 5	1-'RG1A'
249 to 253	5 x 4 = 20	
256 to 265	10 x 4 = 40	
268 to 278	11 x 4 = 44	

908 REQ'D. MK. 'RG1'
6 REQ'D. AS NOTED MK. 'RG1A'.

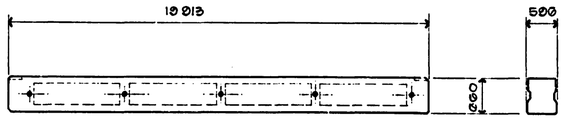

CONCRETE ROADWAY EXPANSION GIRDER.
MK. 'RG5'

For remaining details - refer Drg. Nº CTQ 1122/S/032

Pile Bent Nº	Nº Req'd.
6, 7	2 . 4 = 8
18, 19	2 . 4 = 8
30, 31	2 . 4 = 8
42, 43	2 . 4 = 8
54, 55	2 . 4 = 8
66, 67	2 . 4 = 8
78, 79	2 . 4 = 8
90, 91	2 . 4 = 8
102, 103	2 . 4 = 8
114, 115	2 . 4 = 8
126, 127	2 . 4 = 8
138, 139	2 . 4 = 8
162, 163	2 . 4 = 8
172, 173	2 . 4 = 8
180, 181	2 . 4 = 8

Pile Bent Nº	Nº Req'd.
188, 189	2 . 4 = 8
196, 197	2 . 4 = 8
204, 205	2 . 4 = 8
212, 213	2 . 4 = 8
220, 221	2 . 4 = 8
230, 231	2 . 4 = 8
242, 243	2 . 4 = 8
254, 255	2 . 4 = 8
266, 267	2 . 4 = 8
279, 280	2 . 4 = 8
150, 151	2 . 4 = 8

208 REQ'D. MK. 'RG5'

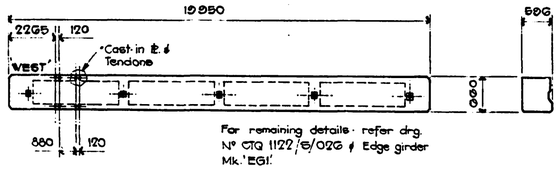

For remaining details - refer drg. Nº CTQ 1122/S/026 & Edge girder Mk. 'EG1'.

CONC. EDGE GIRDER FOR CROSS-OVER (Std. Span)
MK. 'EG6'

Pile Bent Nº	Nº Req'd.
17	1
32	1
47	1
62	1
77	1
92	1
107	1
122	1
137	1
152	1

Pile Bent Nº	Nº Req'd.
167	1
182	1
194	1
227	1
267	1
272	1

16 REQ'D. MK. 'EG6'

N.B.:
EDGE GIRDERS 'EG6' & 'EG7' TO HAVE KERB ANCHOR BARS POSITIONED TO ALLOW FOR A GAP IN KERB UNITS AT CROSS-OVER LOCATIONS. Refer drg. Nº CTQ 1122/S/030.

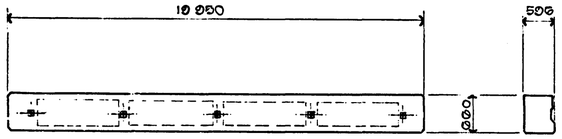

STANDARD CONCRETE EDGE GIRDER
MK. 'EG1'

For remaining details - refer Drg. Nº CTQ 1122/S/031.

Pile Bent Nº	Nº Req'd.
2 to 5	4 . 2 = 8
8 to 16	9 . 2 = 18
17 (CO)	1 . 1 = 1
20 to 23	4 . 2 = 8
24 (PB)	1 . 1 = 1
25 to 29	5 . 2 = 10
32 (CO)	1 . 1 = 1
33 to 41	9 . 2 = 18
44 to 46	3 . 2 = 6
47 (CO)	1 . 1 = 1
48 to 55	6 . 2 = 12
56 to 59	4 . 2 = 8
60 (PB)	1 . 1 = 1
61	1 . 2 = 2
62 (CO)	1 . 1 = 1
63 to 65	3 . 2 = 6
68 to 76	9 . 2 = 18
77 (CO)	1 . 1 = 1
80 to 89	10 . 2 = 20
92 (CO)	1 . 1 = 1
93 to 101	9 . 2 = 18
104 to 106	3 . 2 = 6
107 (CO)	1 . 1 = 1
108 (PB)	1 . 1 = 1
109 to 113	5 . 2 = 10

Pile Bent Nº	Nº Req'd.
116 to 121	6 . 2 = 12
122 (CO)	1 . 1 = 1
123 to 125	3 . 2 = 6
128 to 136	9 . 2 = 18
137 (CO)	1 . 1 = 1
140 to 149	10 . 2 = 20
152 (CO)	1 . 1 = 1
153 to 155	3 . 2 = 6
156 (PB)	1 . 1 = 1
157 to 161	5 . 2 = 10
164 to 166	3 . 2 = 6
167 (CO)	1 . 1 = 1
168 to 171	4 . 2 = 8
174 to 179	6 . 2 = 12
182 (CO)	1 . 1 = 1
183 to 187	5 . 2 = 10
190 to 193	4 . 2 = 8
194 (CO)	1 . 1 = 1
195	1 . 2 = 2
198 to 199	2 . 2 = 4
200 (PB)	1 . 1 = 1
201 to 203	3 . 2 = 6
206 to 211	6 . 2 = 12
214 to 219	6 . 2 = 12
222 to 226	5 . 2 = 10

Pile Bent Nº	Nº Req'd.
227 (CO)	1 . 1 = 1
228 & 229	2 . 2 = 4
232 to 241	10 . 2 = 20
244 to 247	4 . 2 = 8
248 (PB)	1 . 1 = 1
249 to 253	5 . 2 = 10
256	1 . 2 = 2
257 (CO)	1 . 1 = 1
258 to 265	8 . 2 = 16
268 to 271	4 . 2 = 8
272 (CO)	1 . 1 = 1
273 to 278	6 . 2 = 12

432 REQ'D. MK. 'EG1'

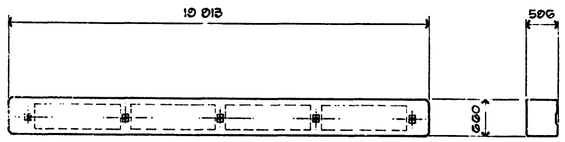

CONCRETE EXPANSION EDGE GIRDER
MK. 'EG5'

For remaining details - refer Drg. Nº CTQ 1122/S/032.

Pile Bent Nº	Nº Req'd.
6, 7	2 . 2 = 4
18, 19	2 . 2 = 4
30, 31	2 . 2 = 4
42, 43	2 . 2 = 4
54, 55	2 . 2 = 4
66, 67	2 . 2 = 4
78, 79	2 . 2 = 4
90, 91	2 . 2 = 4
102, 103	2 . 2 = 4
114, 115	2 . 2 = 4
126, 127	2 . 2 = 4
138, 139	2 . 2 = 4
162, 163	2 . 2 = 4
172, 173*	2 . 2 = 4
180, 181	2 . 2 = 4

Pile Bent Nº	Nº Req'd.
*188, 189	2 . 2 = 4
196, 197*	2 . 2 = 4
204, 205	2 . 2 = 4
*212.	1 . 1 = 1
220, 221*	2 . 2 = 4
*230, 231	2 . 2 = 4
*242.	1 . 1 = 1
*254, 255	2 . 2 = 4
*266, 267	2 . 2 = 4
279, 280	2 . 2 = 4
213.	1 . 2 = 2
243.	1 . 2 = 2
150, 151	2 . 2 = 4

102 REQ'D. MK. 'EG5'

* FOR THESE EDGE GIRDERS (EG5) SITUATED ON NORTHERN SIDE OF ROADWAY ONLY, KERB ANCHOR BARS TO BE POSITIONED TO TAKE A DOORWAY KERB & GAP. Refer drg. Nº CTQ 1122/S/030.

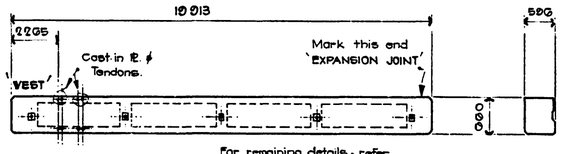

For remaining details - refer Drg. Nº CTQ 1122/S/026 & Edge Girder mk. 'EG5'.

CONC. EDGE GIRDER FOR CROSS-OVER (Expansion Span)
MK. 'EG7'

Pile Bent Nº	Nº Req'd.
212	1
242	1

2 REQ'D. MK. 'EG7'

NOTES:

1. FOR ALL REINFORCEMENT DETAILS - REFER DRG. Nº CTQ 1122/S/031
2. FOR GENERAL LAYOUT OF APPROACH JETTY - REFER DRG. Nº CTQ 1122/S/003 & 004.
3. FOR REMAINING GIRDER DETAILS - REFER SHEET 2 - DRG. Nº CTQ 1122/S/034.

N.B.:
EDGE GIRDERS ('EG1') ON NORTH SIDE OF ROADWAY ONLY & AT EVERY 3RD. SPAN FROM PILE BENT 2 TO PILE BENT 272 INCLUSIVE TO HAVE KERB ANCHOR BARS POSITIONED TO ALLOW FOR A DOORWAY KERB & GAP. Drg. Nº CTQ 1122/S/030

Nº	DATE	AMENDMENTS
A	16-2-77	Kerb Anchor Bars in Edge Girders - added note.
B	15-3-77	Nº Req'd. amended for 'RG1' & 'RG1A' added.

C S R REFERENCE Nº.

THE CORPORATION OF THE TREASURER OF QUEENSLAND

THE SUGAR BOARD
BULK SUGAR TERMINALS

SCALES N.T.S.
DRAWN J.T.
PASSED
DATE JAN.'77

B.S.T. LUCINDA - STAGE III
APPROACH JETTY.
PRECAST CONCRETE ROADWAY
GIRDER ARRG'T. & DETAILS. (SHEET 1)

DRAWING Nº CTQ 1122/S/033 B

MACDONALD WAGNER & PRIDDLE PTY. LTD.
CONSULTING ENGINEERS 313 ST PAULS TERRACE FORTITUDE VALLEY QLD 4006 PH 52 7123
IN ASSOCIATION WITH
CSR LIMITED

Docusign Envelope ID: EFC52467-A2A0-4DE2-91D5-216F30602930

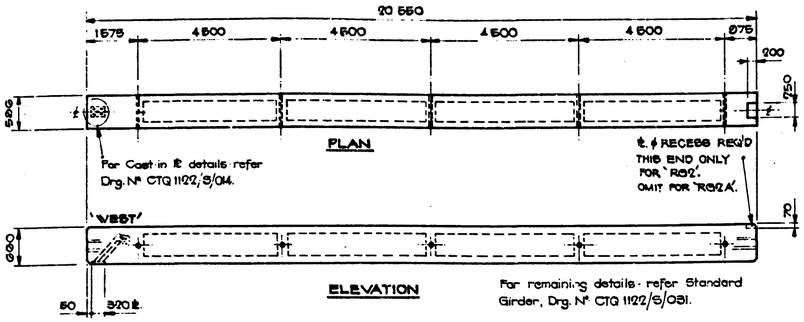

Nº REQ'D.	LOCATION	MARK.
4	PILE BENT Nº 1 NORTH END.	'RG2'
1	"	'RG2A'

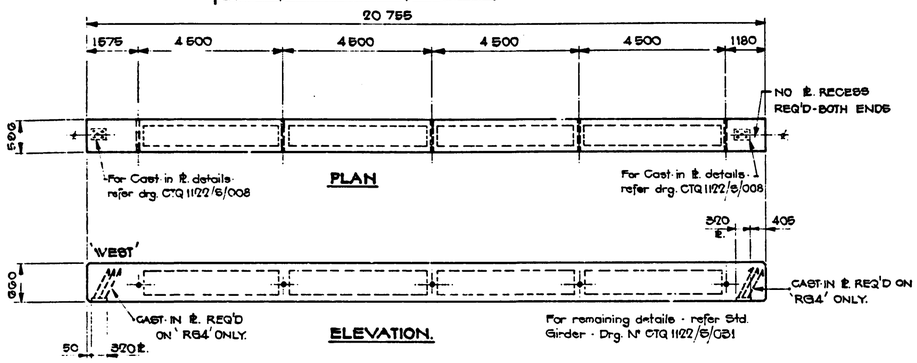

Nº REQ'D.	LOCATION	MARK	REMARKS.
2	PILE BENT Nº 1	'RG4'	AS DRAWN
15	PILE BENT Nº 1	'RG3'	AS DRAWN & NOTED.

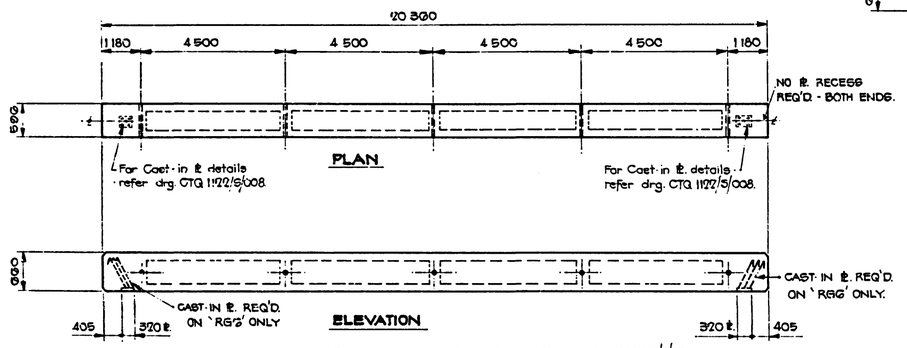

Nº REQ'D.	LOCATION	MARK	REMARKS.
2	PILE BENT Nº 24	'RG6'	AS DRAWN
5	PILE BENT Nº 24	'RG7'	AS DRAWN & NTD.
2	PILE BENT Nº 60	'RG6'	AS DRAWN
5	PILE BENT Nº 60	'RG7'	AS DRAWN & NTD.
2	PILE BENT Nº 108	'RG6'	AS DRAWN
5	PILE BENT Nº 108	'RG7'	AS DRAWN & NTD.
2	PILE BENT Nº 156	'RG6'	AS DRAWN
5	PILE BENT Nº 156	'RG7'	AS DRAWN & NTD.
2	PILE BENT Nº 200	'RG6'	AS DRAWN
5	PILE BENT Nº 200	'RG7'	AS DRAWN & NTD.
2	PILE BENT Nº 248	'RG6'	AS DRAWN
5	PILE BENT Nº 248	'RG7'	AS DRAWN & NTD.

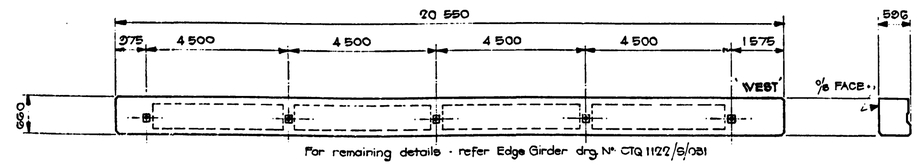

Nº REQ'D.	LOCATION	MARK.
1	PILE BENT Nº 1 NORTH END.	'EG2'

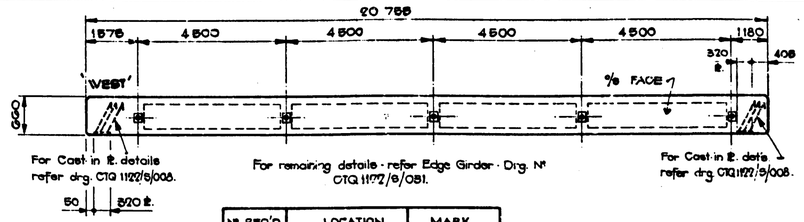

Nº REQ'D	LOCATION	MARK
1	PILE BENT Nº 1 SOUTH END	'EG3'

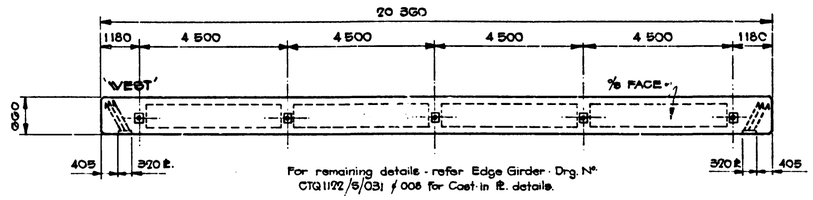

Nº REQ'D	LOCATION	MARK
1	PILE BENT Nº 24 SOUTH END	'EG4'
1	PILE BENT Nº 60 SOUTH END	'EG4'
1	PILE BENT Nº 108 SOUTH END	'EG4'
1	PILE BENT Nº 156 SOUTH END	'EG4'
1	PILE BENT Nº 200 SOUTH END	'EG4'
1	PILE BENT Nº 248 SOUTH END	'EG4'

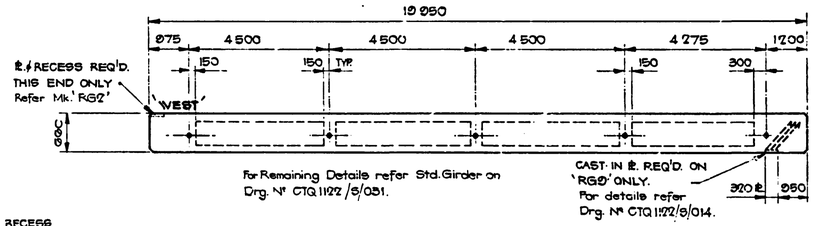

Nº REQ'D	LOCATION	MARK	REMARKS
2	PILE BENT Nº 281	'RG9'	AS DRAWN.
2	PILE BENT Nº 281	'RG8'	AS DRAWN & NTD.

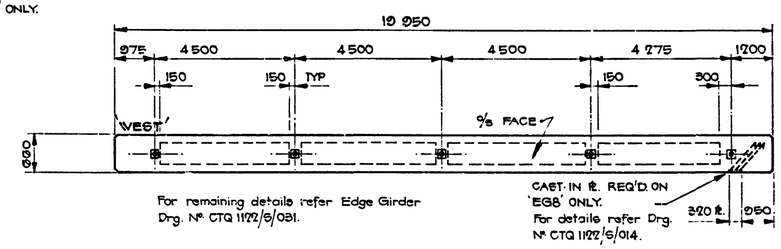

Nº REQ'D	LOCATION	MARK	REMARKS
1	PILE BENT Nº 281	'EG8'	AS DRAWN.
1	PILE BENT Nº 281	'EG9'	OPP. HAND & NTD.

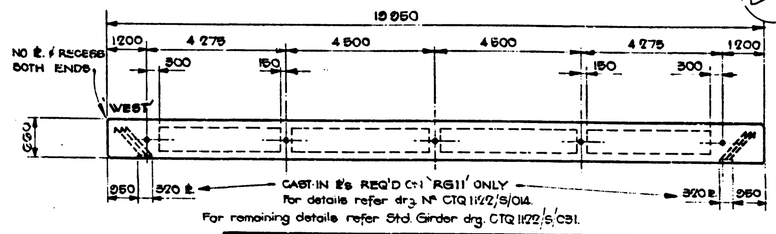

Nº REQ'D	LOCATION	MARK	REMARKS.
2	PILE BENT Nº 282	'RG11'	AS DRAWN
2	PILE BENT Nº 282	'RG10'	AS DRAWN & NTD.

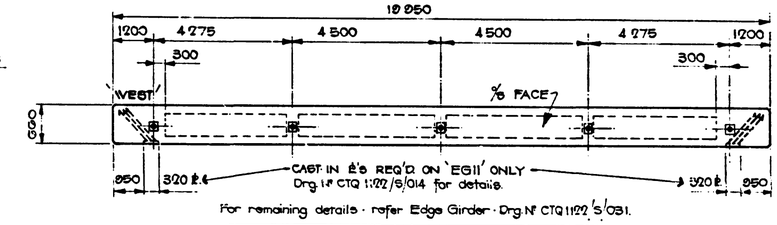

Nº REQ'D	LOCATION	MARK	REMARKS
1	PILE BENT Nº 282	'EG11'	AS DRAWN.
1	PILE BENT Nº 282	'EG10'	OPP. HAND. & NTD.

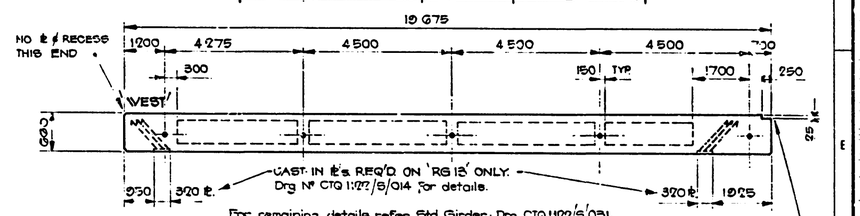

Nº REQ'D	LOCATION	MARK	REMARKS.
2	PILE BENT Nº 283	'RG13'	AS DRAWN
2	PILE BENT Nº 285	'RG12'	AS DRAWN & NTD.

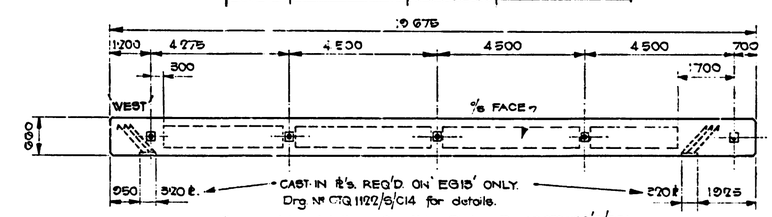

Nº REQ'D.	LOCATION	MARK	REMARKS.
1	PILE BENT Nº 283	'EG13'	AS DRAWN.
1	PILE BENT Nº 285	'EG12'	OPP. HAND & NTD.

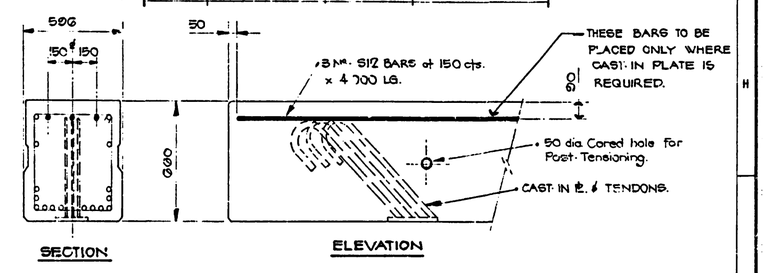

REINFORCEMENT AT CAST-IN PLATE.

NOTES:

1. FOR GEN. ARRG'T. OF ROADWAY GIRDERS REFER DRG. Nº CTQ 1122/S/033.
2. FOR REMAINING GIRDER DETAILS REFER DRG. CTQ 1122/S/033 (SH. 1)

✳ EDGE GIRDERS 'EG12' & 'EG13' TO HAVE KERB ANCHOR BARS ON EAST END POSITIONED TO ALLOW FOR SPECIAL KERB UNIT. - Drg. Nº CTQ 1122/S/030.

THE CORPORATION OF THE TREASURER OF QUEENSLAND

Nº	DATE	AMENDMENTS
A	16-2-77	kerb Anchor Bar in Edge Gird. - Note added.
B	16-3-77	Girders Mk. RG10, 11, 12, 13 - Nº Req'd. amended.

C S R REFERENCE Nº.

THE SUGAR BOARD
BULK SUGAR TERMINALS

B.S.T. LUCINDA - STAGE III
APPROACH JETTY.
PRECAST CONCRETE ROADWAY
GIRDER DETAILS. 'SHEET 2'

SCALES N.T.S.
DRAWN J.T.
PASSED
DATE FEB '77

DRAWING Nº. CTQ1122/S/034 B

MACDONALD WAGNER & PRIDDLE PTY. LTD.
CONSULTING ENGINEERS 313 ST PAUL'S TERRACE FORTITUDE VALLEY QLD 4006 PH 52 7133
IN ASSOCIATION WITH
CSR LIMITED

Docusign Envelope ID: EFC52467-A2A0-4DE2-91D5-216F30602930

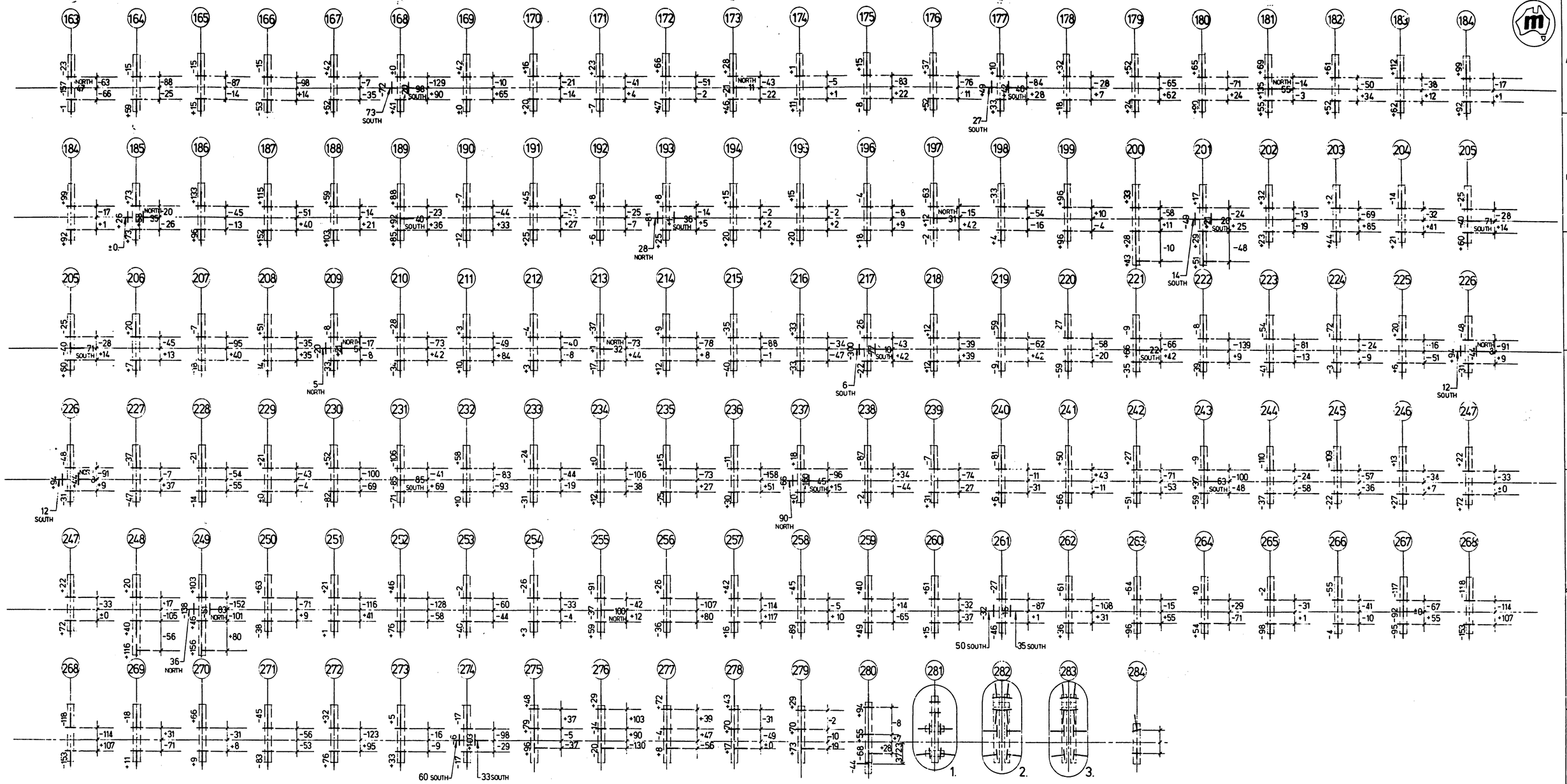

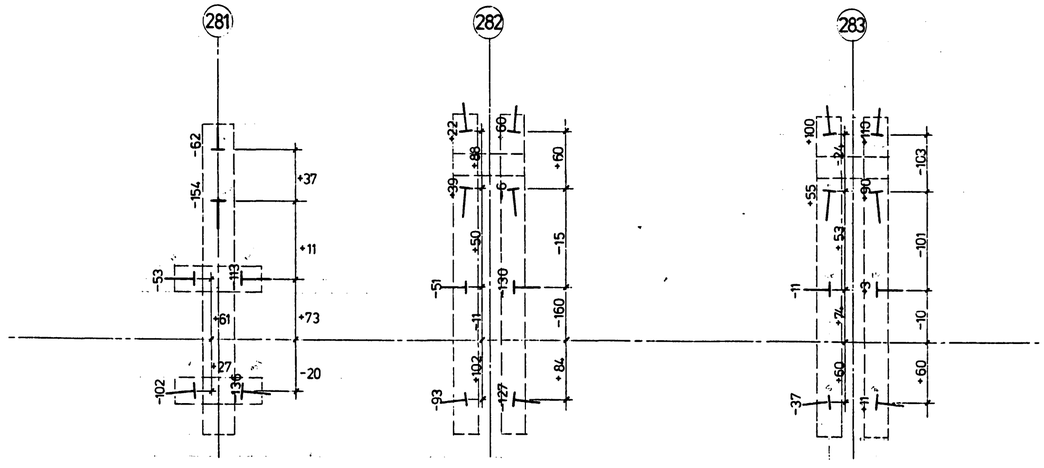

NOTE
THESE RECORDS SHOW:- DIFFERENCE IN PILE DIMENSION FROM ℄ BENTS TO PILE @ ℄ OF HEADSTOCK (mm)
DIFFERENCE IN PILE CHAINAGE FROM DESIGN CHAINAGE (mm)
RECORDED DATA IS FOR PILES WITH HEADSTOCKS ONLY IN POSITION.

THE CORPORATION OF THE TREASURER OF QUEENSLAND

Nº.	DATE	AMENDMENTS

C S R REFERENCE Nº.

THE SUGAR BOARD
BULK SUGAR TERMINALS

SCALES N.A.
DRAWN D.O'B.
PASSED
DATE

B.S.T. LUCINDA – STAGE III
APPROACH JETTY
'AS CONSTRUCTED' PILES

DRAWING Nº. CTQ1122/S/039

MACDONALD WAGNER & PRIDDLE PTY. LTD.
CONSULTING ENGINEERS 313 ST PAULS TERRACE FORTITUDE VALLEY QLD 4006 PH 52 7133
IN ASSOCIATION WITH
CSR LIMITED

Docusign Envelope ID: EFC52467-A2A0-4DE2-91D5-216F30602930

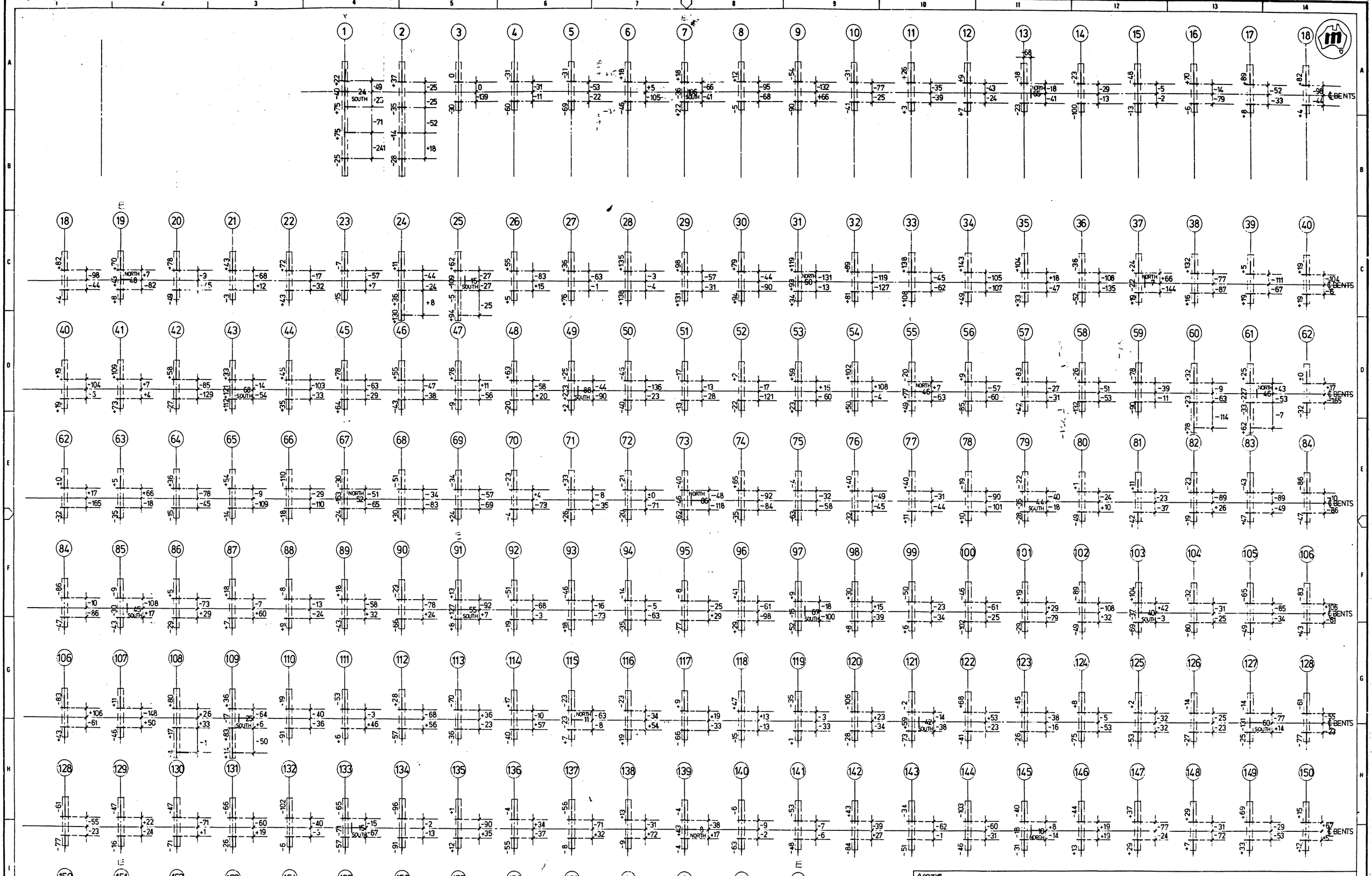

NOTE
THESE RECORDS SHOW:- DIFFERENCE IN PILE DIMENSION FROM ℄ BENTS TO PILE @ HEADSTOCK (mm).
DIFFERENCE IN PILE CHAINAGE FROM DESIGN CHAINAGE (m ±)
RECORDED DATA IS FOR PILES WITH HEADSTOCK ONLY IN POSITION.

NORTH

DESIGN R.L.'S:-

TOP OF HEADSTOCKS	7.320
PILE HEAD	7.058
ANCHOR PILE HEAD	6.258
E.J. " " "	7.008

THE CORPORATION OF THE TREASURER OF QUEENSLAND

No	DATE	AMENDMENTS

THE SUGAR BOARD
BULK SUGAR TERMINALS

SCALES N.A.
DRAWN DCB
PASSED
DATE

B.S.T. LUCINDA – STAGE III
APPROACH JETTY
'AS CONSTRUCTED' PILES

DRAWING No. CTQ1122/5/039

MACDONALD WAGNER & PRIDDLE PTY. LTD.
CONSULTING ENGINEERS 312 ST PAULS TERRACE FORTITUDE VALLEY, QLD 4006 PH 52 7122
IN ASSOCIATION W/TH
CSR LIMITED

C S R REFERENCE No.

Docusign Envelope ID: EFC52467-A2A0-4DE2-91D5-216F30602930

Handover of one jetty 'spider' unit at completion of contract

The Contractor shall hand over one of the Jetty 'spiders' to the Principal at the completion of the contract. The unit handed over shall be of the Contractor's choice. Any additions made to the unit since the initial design and approval may be removed by the Contractor or left in place.

The unit handed over shall be in an as-is condition. Upon handover, the unit does not form part of 'The Works' as per Clause 1 in the General Conditions of Contract. Upon handover, no warranty, guarantee or defects liability period applies. The Principal assumes all risk with respect to further use of the unit for any purpose.

Docusign Envelope ID: EFC52467-A2A0-4DE2-91D5-216F30602930

Annexure Part E – Methodology

Reproduced and modified by **Queensland Sugar Limited (ABN 76 090 152 211**) (**Licensee**) under licence CL0225qsl issued by Standards Australia Ltd.

Docusign Envelope ID: EFC52467-A2A0-4DE2-91D5-216F30602930

Advanced Aqua BLASTING

RESPONSE SCHEDULES SCHEDULE E – METHODOLOGY

Schedule E1 – Methodology

Provide a statement of the Tenderer's proposed arrangements, procedures and methodologies for carrying out and completing WUC. This should include:

1. ***An overview of the methodology proposed by the Tenderer for the carrying out and completion of WUC;***

GENERAL:

Advanced Aqua Blasting (AAB) will have on site depending on work schedule

- 1 x AAB supervisory staff
- 1 x APP Group Quality Assurance person
- 2 x Ingham Agencies (IA) welding teams consisting of 2 men each with the relevant qualifications
- 1 x AAB abrasive blasting and painting team consisting of 3 men
- 1 x AAB Denso Seashield installation team consisting of 3 men
- 1 x Benchmark Scaffolding (BM) scaffold team consisting of 1 supervisor and 4 scaffolders

All AAB team members will be interchangeable depending on skills.

SCAFFOLD

AAB will seek permission to **work on Sundays** during scaffold erection / dismantling to minimize traffic interruptions. Scaffolders will work their 7 shifts including weekends. Their RDO will be weekdays.

Start the erection of 6 scaffolds from PRIORITY A PILEBENT 257.

It is anticipated that 5 pilebents will be fully scaffolded at any one time with work proceeding on them, and with 1 being dismantled and 1 being erected. All scaffolds build plans will be engineered.

The scaffolding will then proceed in numerical order, priority A and B to the last pilebent 281.

AAB will then relocate to pilebent 256 and proceed inwards to complete pilebents priority A and B in numerical order.

The scaffold will be erected so that access to the headstock and piles is on the southern side of the roadway and not impede roadway spider movement.

Initial access will also be from removing the gallery underpans. Replaced during shipping.

The scaffold will be erected so that the roadway spiders can travel along the roadway.

The headstock scaffolding will be erected to facilitate encapsulation and to allow the removal of the petroleum tape and masking around the gallery feet and the removal of any tape / jacket system down to :> 600mm on the piles to allow for abrasive blasting and painting. The scaffold will also be built to allow removal of any part of the structure in contact with the headstock to be removed for abrasive blasting and painting.

See attached scaffold design

HEADSTOCKS / PILES – similar methodology for all PRIORITY A and B pile bent (Appendix D)

1) Welding repairs

On the completion of the scaffold on pile bent 257. AAB will

a) Position spider 1W (1W is the welding equipped spider).
b) High pressure water wash.
c) Start steel thickness inspections and recordings as per **Contract Technical Specification 4.1.2 and the HOLD and WITNESS Points** in the Inspection and Test Plan (ITP).
d) Steel repairs on both headstock and piles. (Specification and drawing APPENDIX J).
e) Replacement of deck unit keeper (QSL 2501-JPHR-G01 APPENDIX A).

f) After all welding repairs are completed, repeat the above step for the next scaffolded pile bent

Docusign Envelope ID: EFC52467-A2A0-4DE2-91D5-216F30602930

2) Denso / Blast and Paint

On the completion of all welding repairs.

a) Encapsulation and removal / protection of Denso wrapping around gallery feet and removal any tape/wrapping to >600mm down the piles
b) Position spider 2B (2B is the abrasive blasting and painting equipped spider)
c) Abrasive blast and paint
d) Collect waste for transportation offshore and remove encapsulation
e) Set up the spider 2B on the next scaffolded pilebent.
f) Denso Seashield jacket fitting **Contract Technical Specification 2.2.3 and the HOLD and WITNESS Points** in the Inspection and Test Plan (ITP).

NOTE: The second coat of protective coating may be applied using QSL gallery air.

Scaffold to remain for the jacket fitting if required

*****See attached Drawings for Jetty Spider****

2. ***Approach with regards to mobilisation for the works over a multi-year program;***

All scaffold and the 2 roadway spiders will remain at the QSL contractors yard during the demobilisation.

The 40' smoko and office donga's will remain at the QSL contractors yard during the demobilisation.

AAB staff on demobilisation will be re employed on other works.

Ingham Agencies (IA) staff on demobilisation will be re employed on other works.

AAB and IA'S staff are local, so they will be available for mobilisation each year.

Benchmark Scaffolding (BM) staff on demobilisation will return home.

All plant will be returned to AAB's Ingham workshop for servicing and under cover storage.

**** See attached drawings - proposed allocated space at the QSL contractors' yard***

3. ***Methodology for managing periods of inclement weather with respect to avoiding delays and maintaining productivity.***

AAB will present to the Principal a "*Stand down agreement*" for consideration. This has worked well in the past tenders and has the following main points:

During periods of Strong wind warning from the BOM, work will cease on the pilebents and staff will work on the C7B Conveyor gallery as per Contract Technical Specification 2.3

It is envisaged that some staff will return to work at the AAB and IA's workshop if the standdown is of a prolonged time frame.

CYCLONES

It is anticipated that no work will be ongoing during the normal cyclone season December through to April. If the BOM issues a cyclone alert all outside of this time frame all efforts will be made to secure the site.

During cyclone season (1 November to 30 April), AAB will maintain an appropriate cyclone readiness procedure with tasks at each cyclone level of green, yellow and orange in accordance with the Port of Townsville categories.

Docusign Envelope ID: EFC52467-A2A0-4DE2-91D5-216F30602930

4. ***Methodology for managing jetty roadway access and details of how it proposes to co-ordinate and work with the Principal's staff and with other contractors:***

   (a) during the works;

   (b) during shipping activities; and

   (c) during major maintenance or construction activities on the wharf.

(a). ROADWAY

AAB will attend or convey to QSL local staff the daily scope of works particularly road closures and the likely impact on QSL activities. This will convey the passing bay being used and the times of the 3hr closures if any.

AAB anticipates that scaffold erection and dismantling will have the most impact on roadway access.

AAB will use weekends for this activity whenever possible. Built scaffold will have no impact on vehicle roadway travel.

The spider design allows unimpeded normal vehicle passing on the roadway.

AAB will have a ***Traffic Management Plan*** which includes signage at the start and end of the work with speed limits, mobile contact numbers and names if access is required outside of the prearranged times. 2 way communication will also be used.

(b). SHIPPING

All removed gallery underpans will be replaced for a shipping event.

An inspection before shipping as well as normal end of day inspections will be carried out to ensure nothing impedes the operation of the belt and no material is left on the belt during gallery work.

QSL and other contractors staff have priority during shipping. AAB will have a Maritime Safety Identification Card (MSIC) holder on site during shipping.

(c). OTHER ACTIVITIES

AAB sees no issues with QSL engaged contractors or visitors such as CSIRO staff travelling through the designated work site. The worksite will be designated by signage and kept as compact as possible. This will be aided by the work methodology of working on consecutive headstocks.

5. ***defect rectification management proposed;***

AAB will submit a detailed Quality Plan as well Inspection and Test Plans (ITP's). that met its requirements as outlined in the Contract General Specification S9.2. This will include defect identification and repair.

This is outlined in detail in SCHEDULE H3 Quality Management.

6. ***provide a summary of any cost saving initiatives or opportunities that it has identified or recommends;***

AAB will employ local people and trades whenever possible to eliminate accommodation costs.

Advanced Aqua Blasting and Ingham Agencies are local companies with a high profile in the community.

AAB will purchase plant and equipment new where ever possible to minimize the possibility of *break downs over the contract life span.*

7. ***provide a summary of innovative work procedures or any other innovation that it recommends or offers during the course of carrying out and completion of WUC; and***

The use of 2 roadway spiders to maximise clearance for vehicles designed by Doug Lee from NQ Engineering, RPEQ certified and built locally by Ingham Agencies,. These spiders will carry equipment for welding, abrasive blasting and painting. They are steerable and towable.

AAB proposed to have on site 2 x 6 seater Polaris vehicles. These will transport all staff engaged on the contract from the staff donga at the contractor yard after sign on, Daily pre start to the work site where they will remain on the assigned passing bay. The use of 2 vehicles allows flexibility in lunch time travel to the off shore crib room, bringing people in and out etc.

Docusign Envelope ID: EFC52467-A2A0-4DE2-91D5-216F30602930

AAB will mark the roadway in the work area with yellow paint to identify the 2m from the gallery wall where Personal Flotation Devices (PFD) are not required to be worn. The remaining area is considered an exposed edge and PFD wearing is mandatory. The identification line will be extended as the work site moves.

8. ***details of how it proposes to co-ordinate and work with the Principal's staff and with other contractors which might be retained by the Principal on the same Site***

(a) for the duration of WUC; and

AAB will hold a formal induction for all AAB and contractors staff with QSL, STL invited to attend.

At this induction all staff will also do the QSL Lucinda BST site specific induction.

This induction will be only for staff working on the contract and will safety oriented. QSL and other contractors staff need not be inducted unless working in AAB's designated work site. People needing the full AAB site specific induction will normally be inducted on a Monday at the AAB site office in the contractors yard.

AAB will provide an escort within reason for small tasks within the AAB worksite.

AAB will attend or convey to QSL local staff the daily scope of works particularly road closures and the likely impact on QSL activities.

(b) in respect to any shut downs of the Principal's facilities which may occur during the course of carrying out and completing WUC.''

AAB will be using main gate passes on a limited basis. Entry to QSL will be through the gate in the contractors yard so main gate issues are not a problem.

AAB will be using QSL gallery water and air as needed. If interruption to these services occur AAB will make alternate arrangements.

AAB will use the off shore crib room while the work site is closest to the wharf. AAB will require electrical power for fridges, micro waves etc. AAB will provide a generator for any prolonged outage.

Please nominate proposed working hours to be inserted in Item 42 of the Contract. Where night works are nominated, please describe the proposed works and include a methodology for managing risks associated with night works.

AAB will seek permission to **work on Sundays** during scaffold erection / dismantling to minimize traffic interruptions. Scaffolders will work their 6 shifts including weekends. Their RDO will be a week day. Normal work hours 0600 – 1700.

For AAB and IA staff – Normal work hours 0600 – 1700 Monday / Saturday with Sundays as the RDO. This may alter to accommodate favorable tide cycles for pile jacket fitting.

AAB will also make provision for seeking approval for a night shift during favorable tide cycles for welding repairs and or Seashield jacket fitting.

Docusign Envelope ID: EFC52467-A2A0-4DE2-91D5-216F30602930

The following form part of the Methodology

Source	Topic	Description
RFI01+Interview responses	QA/QC Representative role implementation	Ben Eames from APP Group will be utilised to provide and set up the Dashpivot system for Quality Assurance record management and other management and reporting functions. Refer to further description of the proposed system in slides from tender interview in annexure Part I - Key Personnel. Rod Cockle will commence in a QA/QC officer role until a QA/QC person can be permanently added to AAB Staff. The permanent person is likely to be Wade Mitchell, who will also assist in scheduling, safety and other project management tasks.
RFI01 + Interview responses	Online quality reporting tool	AAB will utilise Dashpivot software system and upload data daily during weekdays. Refer to further description of the proposed Dashpivot system in slides from tender interview in annexure Part I - Key Personnel.
RFI01	Use of Polaris vehicles or similar	Principal RFI: Schedule E methodology notes the use of Polaris vehicles. QSL has a speed limit of 20km/h for these vehicles in accordance with state regulations. Please confirm that AAB has reviewed the applicable state regulations and agrees to implement any/all safety measures, as required, in the use of Polaris vehicles along the jetty/wharf. Contractor Response: AAB understand the state regulations and have taken that into considerations. ATV to be governed to 20K/hour. All doors to be solid hinged. AAB choose this as a transportation method to minimize vehicle footprint onsite and allow more flowing worksite for breaks, etc.
RFI01	Conveyor gallery access	Principal RFI: Please indicate how workers will access the conveyor gallery wrapping above the belt. Contractor Response: AAB to have engineered and approved platforms with access ladders that straddle the conveyor system. Design to be approved by QSL to prior to fabrication. See attched proposal design. Platform to be made from aluminium. Bolt on ladders for ease of handling and dismantling in a shipping event. 3 x to be made so multiple work fronts can be accessed. Platform to be 1200mm wide.
RFI02	Expansion joint scaffold access	Principal RFI: Could you please re-examine and explain pricing for item 2.9.1 (access for expansion joints). As the price is much higher than access for similar pilebents, we would like to understand the additional effort, modified design and inclusions that drive this price increase. Contractor Response: The variance in pricing is due to a design change required to support the scaffolding. Benchmark proposes to weld a steel member to the end of the headstock to provide support for the southern end of the scaffold. The quoted price includes: 1) Labour hours for a boilermaker to complete the welding works; 2) Temporary scaffolding to enable safe access for the boilermaker to carry out the welding; and 3) Subsequent installation of the scaffolding to access the headstock.
RFI05	Embedding of learnings from safety incidents	Principal RFI: please detail how AAB plan to embed past incident learnings from all projects into their daily WHS practices to prevent recurrence of similar injuries, such as manual handling strains, eye injuries from foreign bodies, and lacerations. Contractor Response: All AAB Incident investigation and resolution is around the "Hierarchy of Controls" . During this process, AAB will make what ever change is warranted regardless of the inconvenience and the cost as AAB puts worker safety first. To have Incident reporting, you must first have an Incident reporting culture and forums to encourage this. AAB holds weekly toolbox meetings at AAB workshop with items on the agenda covering incidents or nearmisses, safety shares and any recommended changes to SWMS. These are also shared between site works to allow all staff to be informed of any issues or changes. Through this we have implemented changed like Foam Backed Glasses to be worn through out identified scopes of work. For the LBST Jetty Remediation Project, AAB will hold a monthly safety toolbox BBQ (additional to weekly toolbox) with workers being awarded for Hazard Identification, safety culture and take 5 inputs. On the agenda AAB will find incidents and challenges in industries similar to ours to find learnings we could use to implement changes to our WHS Practices. AAB values Third Party Audits to review our processes and will make suggested changes as soon as practicable and ensure compliance and reporting feedback .
RFI08	Recovery of loose and flaking paint during preparation	Principal RFI: Please provide brief details of how AAB will minimise loose and flaking paint that is removed during waterblasting of headstocks and piles from entering the environment Contractor Response: The headstock scaffold will be fully encapsulated on all sides with fire resistant powerclad before water washing, with geofab on the floor to allow water to be strained before release. After water washing the geofab, removed loose coating and rust will be removed, the powerclad on the sides will remain. After welding repairs, powerclad or similiar will be placed on the scaffold floor to complete encapsulation. It will not be a negative pressure encapsulation so a small amount of nuisance dust will escape during abrasive blasting. This is permitted under AAB'S IEMS. The removed coating and spent garnet will be collected and transported inshore for collection by MAMS Environmental services on an as need basis. The majority of loose coatings and rust on the piles will be removed manually during the steel inspection process before water washing and will be collected in a funnel type arrangement. This funnel will stay inplace during water washing of the piles allowing strained water to pass through a geofab filter material. The removed loose coating and rust will also be collected and transported inshore for collection by MAMS Environmental services. This collection funnel will be installed above the barnacle line on the pile.

Docusign Envelope ID: EFC52467-A2A0-4DE2-91D5-216F30602930

CONCEPT NOTES:
1. This is a proof of concept drawing only. RPEQ licenced engineer Doug Lee who is familiar with the JMV concept and requirements at Lucinda sugar terminal has attended site with Advanced Aqua Blasting and confirms that development of this concept design is feasible and if progressed will be able to be detail designed, certified and manufactured for use in accordance with all required QLD regulation, AS standards, and QSL (Lucinda site) standards/requirements.
2. This is a concept for a load rated platform trailer that can be towed into position along the jetty, it is intended to be loaded with painting equipment by Advanced Aqua Blasting for the purpose of jetty refurbishment.

MATERIAL NOTES:
1. Structural beams 250UB
2. Drawbar 75x6 SHS
3. Platform, stairs, handrails all Webforge Monowills system typical
4. Solid tyres 8.25-15, no suspension, no service brake, park brake only
5. Linkages / hinges / hydraulics detail design to be developed

FABRICATION NOTES
1. The main portals are fully welded
2. Ancillary equipment can be bolted or be removable as required
3. The drawbar is fully welded mounted on special swivelling/locking hinges
4. Painting to owners specification

DIMENSIONAL NOTES:
1. Trailer platform length between 4000 & 6000 mm
2. Under trailer clearances to be confirmed by emergency service vehicle requirements.
3. Exact location of point loads (welders, blast pots, garnet storage etc) to be specified

CAPACITY NOTES:
1. Aggregate Trailer Mass = 3500 kg
2. Tare mass estimated = 1800 kg
3. The load platform is rated to hold payload up to 3500kg
4. Tow vehicle must be rated to pull trailer, an unbraked, loaded trailer may not be suitable for towing with light vehicle ute. If towing with ute electric brakes to be fitted at higher laden weights.

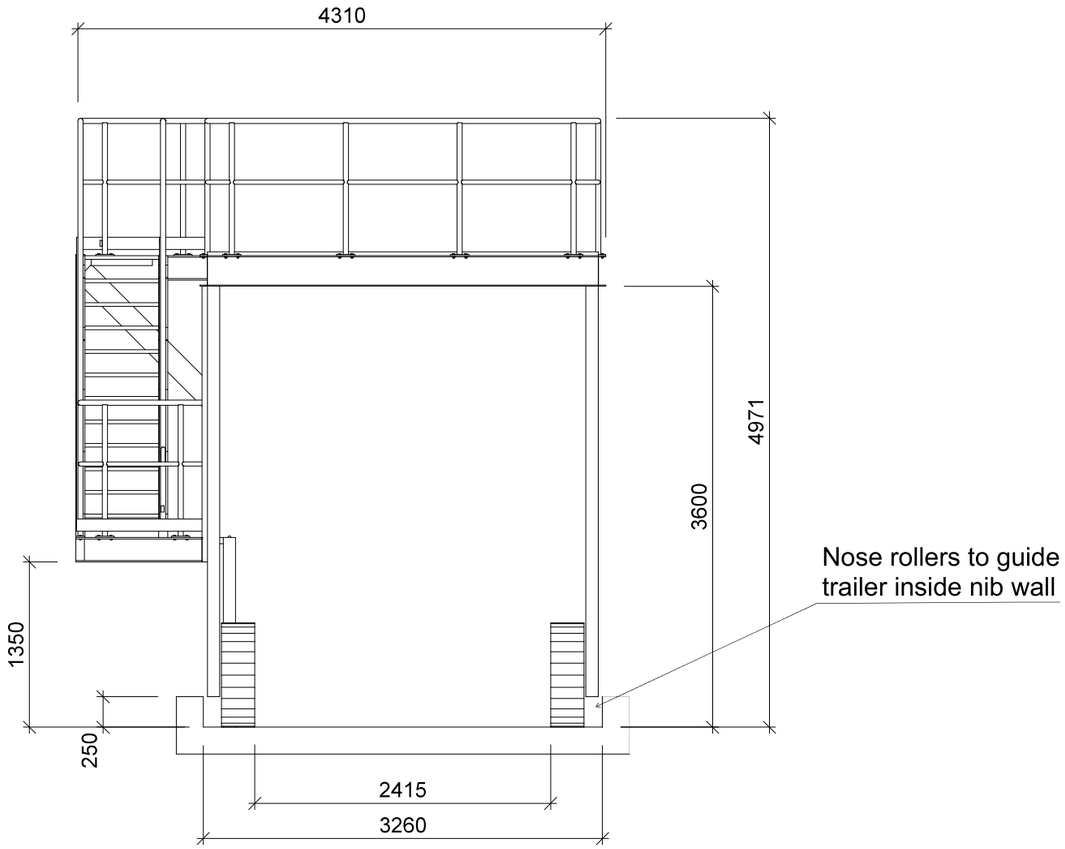

FRONT VIEW

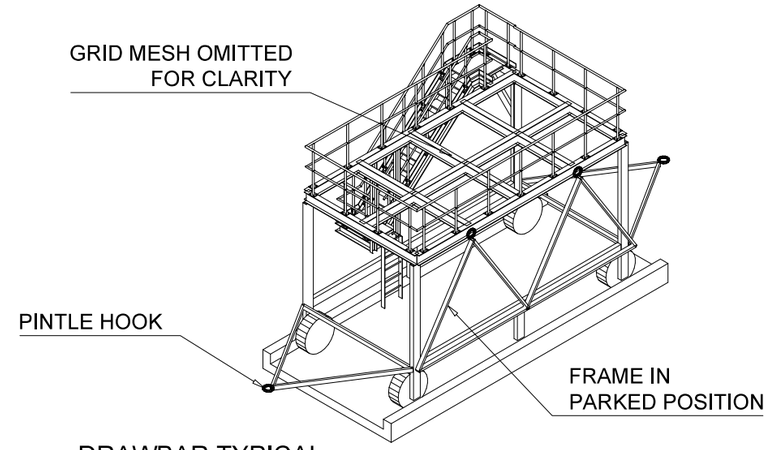

DRAWBAR TYPICAL
DRAWBAR HINGES OUT OF WAY WHEN NOT IN USE

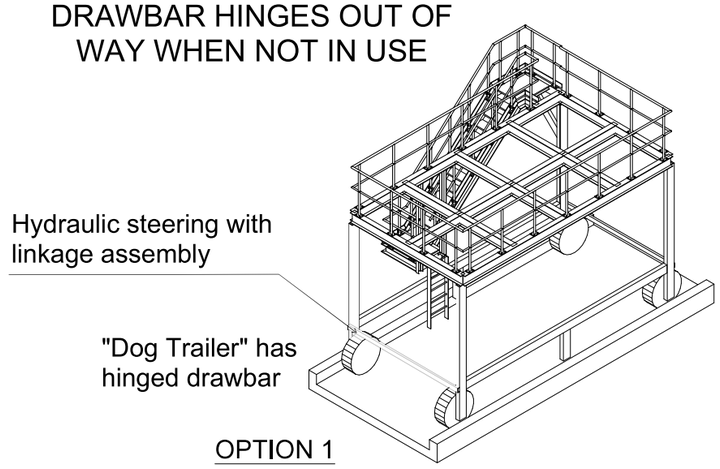

OPTION 1
4 WHEELED STEERING TRAILER

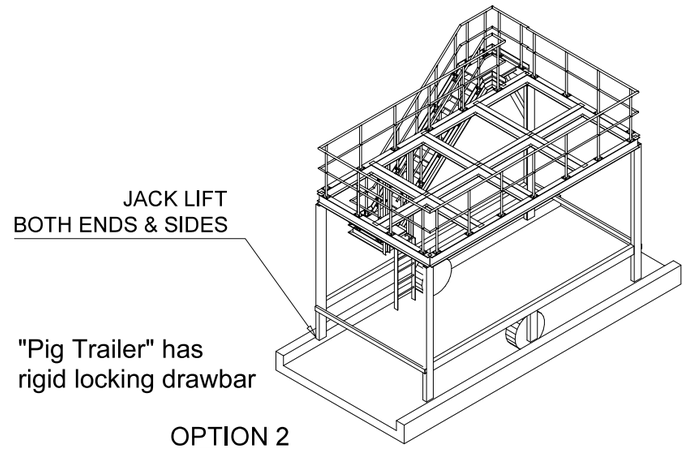

OPTION 2
2 WHEELED TRAILER WITH JACKS

CONCEPT REVIEW

DRAWN TO AS1100 TECHNICAL DRAWING STANDARDS
ALL DIMENSIONS IN
SCALE: As Shown

COPYRIGHT © This drawing remains the property of North Queensland Engineering Pty Ltd and shall not be passed on in any electronic format to any third party without prior written approval from North Queensland Engineering Pty Ltd.

NQE North Queensland Engineering
www.nqeng.com.au – admin@nqeng.com.au

Job No.: 240723
Client : ADVANCED AQUA BLASTING
Project : JETTY SPIDER

Mark No :	3RD ANGLE PROJECTION
Revision Date : 14.11.2024	Scale : 1:125,1:50
Revision : A	Drawn : G.RICHTER
DRG No. : 240723 -A- 001	A3

Docusign Envelope ID: EFC52467-A2A0-4DE2-91D5-216F30602930

LUCINDA BULK SUGAR TERMINAL TYPICALS BENCHMARK

CONTAINMENT SHALL BE REMOVED IF WIND SPEED IS FORECAST TO EXCEED XX km/hr

acrow. ENGINEERING & CONSTRUCTION

GENERAL NOTES

1. IF IN DOUBT, PLEASE ASK.
2. DO NOT OBTAIN DIMENSIONS BY SCALING FROM THESE DRAWINGS.
3. VERIFY ON SITE ALL SET OUT DIMENSIONS SHOWN ON THESE DRAWINGS.
4. ALL DIMENSIONS ARE IN MILLIMETERS UNLESS NOTED OTHERWISE ON THESE DRAWINGS.
5. ALL PERMANENT STRUCTURE DIMENSIONS ARE TO BE CHECKED & VERIFIED PRIOR TO ERECTION OF SCAFFOLD. THE SCAFFOLD DESIGN IS BASED ON THE DIMENSIONS SHOWN ON THESE DRAWINGS. RE-DESIGN MAY BE REQUIRED WHERE ACTUAL DIMENSIONS DIFFER.
6. NO ALTERATIONS TO THE DESIGN SHOWN ON THESE DRAWINGS ARE PERMITTED WITHOUT THE PRIOR APPROVAL OF THE DESIGNER. SUPPORT LAYOUT MAYBE RE-ARRANGED TO SUIT SITE CONDITIONS, PROVIDING THAT THE MAXIMUM BAYS SIZES AND LEG LOADS DO NOT EXCEED THE VALUES INDICATED IN THE NOTES.
7. THE DESIGN DEPICTED ON THESE DRAWINGS IS VALID FOR THE NOMINATED PROJECT & STRUCTURE ONLY.
8. THE SCAFFOLD SHOWN IN THESE DRAWINGS HAS GENERALLY BEEN DESIGNED IN ACCORDANCE WITH THE RELEVANT SECTIONS OF THE FOLLOWING AS AUSTRALIAN STANDARDS & DOCUMENTS:
   - -AS/NZS 1170.0:2002 STRUCTURAL DESIGN ACTIONS PART 0: GENERAL PRINCIPALS
   - -AS/NZS 1170.2:2021 STRUCTURAL DESIGN ACTIONS PART 2: WIND ACTIONS
   - -AS/NZS 1576.1:2019 SCAFFOLDING PART 1: GENERAL REQUIREMENTS
   - -AS 4100:2020 STEEL STRUCTURES
   - -AS 4576.2020 GUIDELINES FOR SCAFFOLDING
   - -RELEVANT SCAFFOLD CODE OF PRACTICE
9. THE DESIGN HAS BEEN BASED ON THE USE OF ACROW FORMWORK & SCAFFOLDING EQUIPMENT ONLY. OTHER EQUIPMENT MAY HAVE A DIFFERENT SAFE WORKING LOAD AND THUS MAY NOT BE ADEQUATE IN THE APPLICATION SHOWN ON THIS DRAWING.
10. IRRESPECTIVE OF ANY RECOMMENDATIONS SHOWN ON THE DRAWINGS, THE USER IS RESPONSIBLE FOR THE STRUCTURAL ADEQUACY OF MATERIAL OF THEIR OWN SUPPLY AND FOR ENSURING THAT THE APPROVED WORKING LOAD LIMITS OF ACROW FORMWORK & SCAFFOLDING EQUIPMENT ARE NOT EXCEEDED.
11. THE CLIENT MUST ENSURE THAT THE PERMANENT STRUCTURE HAS ADEQUATE STRENGTH TO WITHSTAND THE IMPOSED LOADS NOTED. ALL TIE LOADS MUST BE TAKEN BY THE PERMANENT STRUCTURE.
12. THE CLIENT IS TO ENSURE THAT THE SUPPORTING GROUND (WHERE APPLICABLE) HAS ADEQUATE CAPACITY TO SUPPORT THE LOADS FROM THE SCAFFOLD WITHOUT EXCESSIVE SETTLEMENT INCLUDING DIFFERENTIAL SETTLEMENT.
13. ALL TYPICAL DETAILS ARE TO BE USED AS EXAMPLES ONLY AND IF SPECIAL OR DIFFERENT DETAILS ARE NOTED IN THE CONSTRUCTION DRAWINGS VARY, TYPICAL DETAILS ARE TO BE DISREGARDED.
14. ALL SCAFFOLD SHALL BE INSPECTED & STRUCTURE MUST BE CHECKED BY CLIENT PERIODICALLY AND AFTER INCLEMENT WEATHER OR MAIN LOADING EVENT TO ENSURE THAT ALL COMPONENTS AND CONNECTIONS ARE TIGHT AND THE INTEGRITY OF THE STRUCTURE IS INTACT.
15. LOADS SHOWN ARE UNFACTORED WORKING LOADS.

SCAFFOLD NOTES

1. THE STABILITY OF THE SCAFFOLD MUST BE MAINTAINED AT ALL TIMES, AND IF NECESSARY, ADDITIONAL BRACING AND ANCHORING MUST BE PROVIDED.
2. IMPACT LOADS HAVE NOT BEEN ALLOWED FOR IN THIS DESIGN. IT SHALL REMAIN THE CLIENTS RESPONSIBILITY TO ENSURE THAT SUFFICIENT PRECAUTIONS ARE TAKEN TO AVOID IMPACT LOADS ON THE SCAFFOLD DURING USE AND CRANEAGE & VEHICULAR OPERATIONS.
3. THIS DESIGN HAS BEEN PREPARED FROM THE INFORMATION SUPPLIED TO THE DESIGNER BY, OR ON BEHALF OF THE SITE TEAM. THE SITE TEAM MUST CHECK THAT WE HAVE CORRECTLY INTERPRETED THEIR REQUIREMENTS AND THAT WHERE APPLICABLE, ALL LOADINGS, DIMENSIONS, DETAILS, ERECTION AND SEQUENCES ETC, ARE AS REQUIRED AND PRACTICABLE.
4. ALL ERECTION WORK IS TO BE CARRIED OUT IN A SAFE TRADESMANLIKE MANNER AND BE IN ACCORDANCE WITH ACROW FORMWORK & SCAFFOLDING GUIDELINES, AS1576, AS4576, LOCAL AUTHORITY REQUIREMENTS AND OCCUPATIONAL HEALTH AND SAFETY REGULATIONS.
5. TIES OR OTHER COMPONENTS ARE NOT TO BE MOVED OR TAMPERED WITH IN ANY WAY EXCEPT BY ACROW FORMWORK & SCAFFOLDING OR OUR NOMINATED SUB-CONTRACTORS.
6. UNLESS NOTED OTHERWISE ON DRAWING THE DISTANCE BETWEEN BRACED BAYS IS NOT TO EXCEED FIVE BAYS.
7. UNLESS NOTED OTHERWISE ON THE DRAWING, ALL RETURNS OR BREAKS IN SCAFFOLD ARE TO BE TUBE TIED, COMPLETE WITH PLANKING, GUARDRAILS OR MESH INFILL AS REQUIRED ON ADJACENT SCAFFOLD.
8. UNLESS NOTED OTHERWISE ON THE DRAWING, SCAFFOLD MUST BE A MAXIMUM OF 225mm FROM THE WORKING FACE UNLESS DIRECTED OTHERWISE BY LOCAL SAFETY AUTHORITIES. GAPS TO WORKING FACE GREATER THAN 225mm TO BE FILLED AS REQUIRED ON SITE.
9. INDEPENDENT SCAFFOLD BAYS TO BE LINKED USING SCAFFOLD TUBE AND FITTING AT LEDGER POINTS NO GREATER THAN 2.00m VERTICALLY.
10. UNLESS NOTED OTHERWISE ON DRAWING PLATFORM BRACKETS ("HOP UPS") ARE NOT TO BE LOADED WITH MATERIALS. THEY ARE TO BE USED FOR ACCESS BY PERSONNEL ONLY.
11. BELOW SYMBOLS SHOWN ON THE DRAWINGS INDICATE LAPS AND RAKERS/TIES.

LAP DETAIL MARKER INDICATES SCAFFOLD TUBES, FITTINGS & LAPPING BOARDS TO JOIN ADJACENT SCAFFOLDS. TUBE TIE AT 2000mm CENTERS VERTICALLY (INTERNAL & EXTERNAL STD) → LAP

TIE DETAIL MARKER INDICATES SCAFFOLD TIES FIXED TO SLAB EDGE, THROUGH WINDOW OPENINGS AND TO THE SIDE OF EDGE BEAMS. HORIZONTAL DISTANCE BETWEEN TIES AS SHOWN AND VERTICAL DISTANCE BETWEEN TIES MUST NOT EXCEED 4000mm U.N.O. TIES TO BE TIED TO BOTH STANDARDS U.N.O.

TIES AND BRACING

THE PRINCIPAL CONTRACTOR IS RESPONSIBLE FOR ENSURING ALL SCAFFOLD STRUCTURES REMAIN ADEQUATELY TIED AND BRACED TO CARRY THE TIE FORCES AND ENSURE STABILITY. TIES OR HOP-UPS ARE NOT PERMITTED TO BE MOVED BY OTHER TRADES REGARDLESS IF THEY HOLD A VALID SCAFFOLD TICKET WITHOUT CONSULTING AFS.

- CONSULT ACROW FORMWORK & SCAFFOLDING FOR SCAFFOLD TIE AND BRACING REQUIREMENTS FOR SCAFFOLD EXCEEDING 50m TO THE TWP.
- REFER DRAWING FOR REQUIREMENTS REGARDING DOUBLED LEGS OR 1m LIFTS IF REQUIRED.
- NO JOINTS IN STANDARDS ABOVE TOP TIE IS ALLOWED UNLESS PINNED OR SPLICED AS PER THE TYPICAL DETAIL.
- PRESCRIBED CONTAINMENT/LINING NOT TO EXTEND MORE THAN 2m PAST LAST TIE, UNO.
- TIES ARE TO BE INSTALLED AS PER STANDARD TIE DETAILS SHOWN IN THESE DRAWINGS. ALL TIE LOCATIONS MAY UTILISE ANY OF THESE DETAILS TO SUIT THE PARTICULAR TIE POINT IF APPLICABLE.
- TIES MUST BE INSTALLED WITHIN 300mm OF A CONNECTED NODE OR SCAFFOLD LEG TO BE DOUBLED AS PER TYPICAL SINGLE LEG TIE DETAIL IN MIDDLE OF STANDARD.
- TUBE IN SCAFFOLD COUPLERS MUST PROTRUDE BY AT LEAST 10mm OUT OF THE COUPLER. IT MAY ALSO BE PRUDENT TO WRAP END OF TIES IF THE SCAFFOLD TUBE EXTENDS INTO THE WALKWAY AREA.
- IF WIND SPEEDS ARE LIKELY TO REACH OR EXCEED 100km/hr, PRESCRIBED CONTAINMENT SHEETING TO BE REMOVED.
- SCAFFOLD BOARDS SHALL BE STRAPPED DOWN OR REMOVED IF WIND SPEEDS ARE FORECAST TO EXCEED 60km/hr.
- REFER TO UNIMESH FR2 INSTALLATION GUIDE FOR INSTRUCTIONS ON HOW TO ATTACH CONTAINMENT TO PERIMETER SCAFFOLD.
- WHERE ANCHORS INTO CONCRETE ARE REQUIRED, THEY SHALL BE SET AS PER MANUFACTURERS SPECIFICATION CENTRALLY INTO MIN. 200mm THICK SLAB @ 25MPa MIN.

DESIGN LOADS

1. THE SCAFFOLD HAS BEEN DESIGN ED USING THE FOLLOWING PARAMETERS:
   SCAFFOLD INTENDED USE - ACCESS AND EDGE PROTECTION
   TYPE OF SCAFFOLD - RINGLOCK (AT-PAC)

   MAX. SCAFFOLD HEIGHT TO TOP DECK = xx m
   NO. OF DECK LEVELS = x
   NO. OF WORKING LEVELS AT ANY ONE TIME = x
   MAX. ADJUSTABLE BASE JACK EXTENSION = 450 mm
   MAX. LEG LOAD (EXCL. STAIRS) = xx kN
   MAX. WORKING TIE LOAD = 6 kN

2. THE SCAFFOLD DUTY RATING, MAXIMUM LOAD APPLIED UNIFORMLY OVER THE ENTIRE BAY & MAXIMUM NUMBER OF DECKS TO BE USED AT ANY ONE TIME SHALL BE IN ACCORDANCE WITH TABLE 1.0.

TABLE 1.0: DUTY RATING

RATING	MAX BAY LOAD	MAX NO LEVELS
LIGHT DUTY	225 KG	0
MEDIUM DUTY	450 KG	0
HEAVY DUTY	675 KG	0

3. LOADING BAYS UNIFORMLY DISTRIBUTED LOAD = 5 kPa
4. STAIRS UNIFORMLY DISTRIBUTED LOAD = 2.5 kPa
5. WIND LOADS CALCULATED IN ACCORDANCE WITH AS/NZS 1170.2 USING THE FOLLOWING PARAMETERS:
   -IMPORTANCE LEVEL 2 (CONSTRUCTION)
   -REGION [A / B / C]
   -TERRAIN CATEGORY 2
   -V_{100} (ULTIMATE) = [41 / 48 / 56] m/s (WITHOUT HOARDING), 27.8 m/s (WITH HOARDING)

CERTIFICATION

1. IT IS THE RESPONSIBILITY OF THE CONTRACTOR TO OBTAIN DESIGN CERTIFICATION IN ACCORDANCE WITH THE RELEVENT CODE OF PRACTICE. ACROW FORMWORK & SCAFFOLDING CAN PROVIDE DESIGN CERTIFICATION UPON REQUEST.
2. UNLESS DRAWINGS HAVE BEEN ACCOMPANIED BY A DESIGN CERTIFICATE, IT IS TO BE ASSUMED THE DRAWINGS ARE NOT CERTIFIED AND CONSTRUCTION WORK SHOULD NOT PROCEED.

DRAWING REFERENCE

SHEETS START	SHEETS END	DESCRIPTION
1	9	TITLE SHEETS & TYPICAL DETAILS
10	99	GENERAL ARRANGEMENTS
100	199	SECTIONS & ELEVATIONS
200	299	PERSPECTIVES
300	399	STANDARD DETAILS

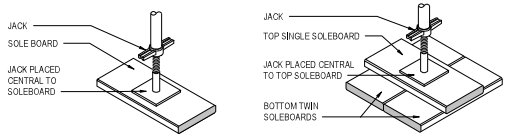

SINGLE TIMBER SOLEBOARD
MAXIMUM DESIGN LEG LOAD - -kN
MINIMUM REQUIRED GROUND BEARING CAPACITY - -kPa

TRIPLE TIMBER SOLEBOARD
MAXIMUM DESIGN LEG LOAD - -kN
MINIMUM REQUIRED GROUND BEARING CAPACITY - -kPa

TIMBER SOLEBOARD SELECTION REQUIREMENTS:

1. THE CLIENT MUST ENSURE THAT THE SUPPORTING FOUNDATION HAS ADEQUATE BEARING CAPACITY TO SUPPORT THE LOAD IMPOSED BY THE SCAFFOLD. THIS SHOULD BE SUPPLIED TO THE CLIENT BY MEANS OF A REPORT BY A ENGINEER COMPETENT IN GEOTECHNICAL ENGINEERING OR WRITTEN CONFIRMATION THAT THE SUPPORTING GROUND OR STRUCTURE IS ADEQUATE FOR THE LOADS APPLIED AS SHOWN IN THE DESIGN.
2. THE CLIENT SHALL ENSURE THAT THE SCAFFOLD IS ERECTED ON A LEVEL AND STABLE BEARING SURFACE FOR ALL SOLEBOARD LOCATIONS.
3. SOLEBOARDS SHALL BE MINIMUM 225mm WIDE x 38mm THICK x 500mm LONG PER SOLEBOARD.

TYPICAL DETAIL - SOLEBOARD LAYOUTS

SCALE: NTS

CONCEPT ISSUE

REV	DATE	DESCRIPTION	DRWN	CHKD
A	13.05.2025	CONCEPT ISSUE, NOT FOR CONSTRUCTION	MJF	JJH

CLIENT	DRAWING TITLE
BENCHMARK	TITLE PAGE & GENERAL NOTES

PROJECT	JOB NO.	DWG.
LBST TYPICALS	250218	01

acrow. ENGINEERING & CONSTRUCTION

THIS DRAWING AND THE INFORMATION IT CONTAINS ARE THE PROPERTY OF ACROW GROUP OF COMPANIES IT IS NOT TO BE TRACED OR COPIED, NOR IS THE INFORMATION TO BE MISUSED IN ANY WAY.

Docusign Envelope ID: EFC52467-A2A0-4DE2-91D5-216F30602930

GENERAL NOTES

1. THIS DRAWING MUST BE PRINTED IN COLOUR.
2. THIS DRAWING TO BE READ IN CONJUCTION WITH ACROW DRAWING 250218-01.

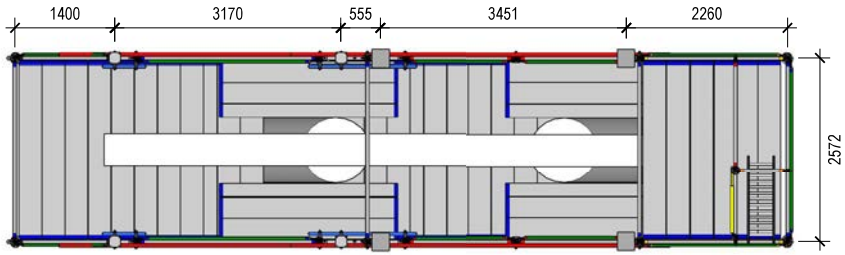

PLAN VIEW
SCALE: 1:75 @ A3

1
--

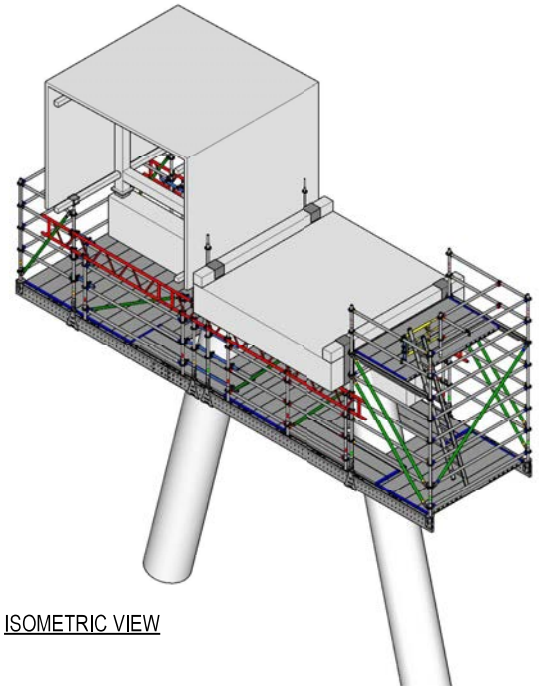

ISOMETRIC VIEW

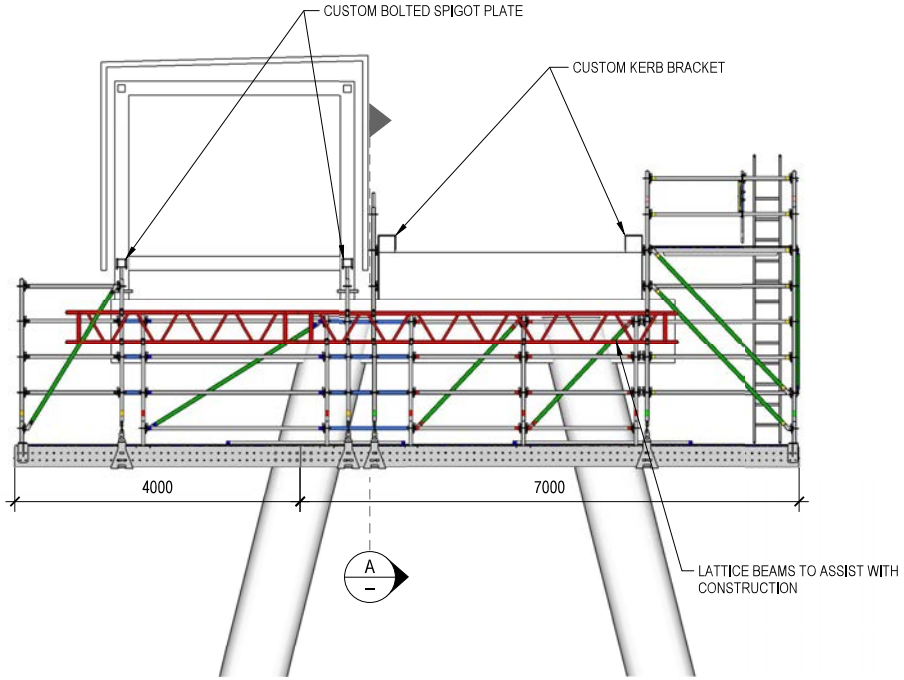

ELEVATION 1 --
SCALE: 1:75 @ A3

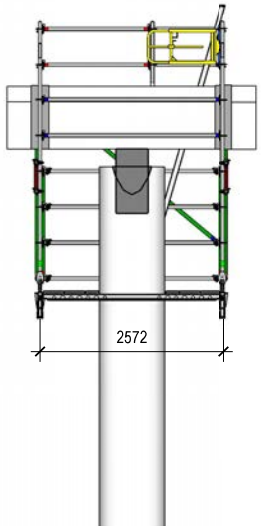

SECTION A --
SCALE: 1:75 @ A3

ALL SCAFFOLD TO BE RINGLOCK

CONCEPT ISSUE

REV	DATE	DESCRIPTION	DRWN	CHKD
A	13.05.2025	CONCEPT ISSUE, NOT FOR CONSTRUCTION	MJF	JJH

CLIENT	DRAWING TITLE
BENCHMARK	TYPICAL BAY

PROJECT	JOB NO.	DWG.
LBST TYPICALS	250218	10

acrow. ENGINEERING & CONSTRUCTION

THIS DRAWING AND THE INFORMATION IT CONTAINS ARE THE PROPERTY OF ACROW GROUP OF COMPANIES IT IS NOT TO BE TRACED OR COPIED, NOR IS THE INFORMATION TO BE MISUSED IN ANY WAY.

Docusign Envelope ID: EFC52467-A2A0-4DE2-91D5-216F30602930

GENERAL NOTES

1. THIS DRAWING MUST BE PRINTED IN COLOUR.
2. THIS DRAWING TO BE READ IN CONJUCTION WITH ACROW DRAWING 250218-01.

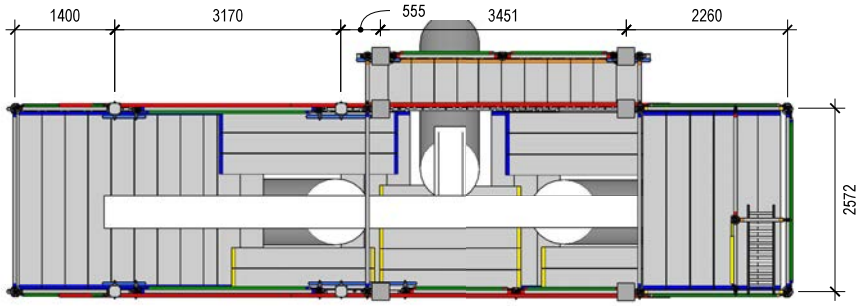

PLAN VIEW
SCALE: 1:75 @ A3

1
--

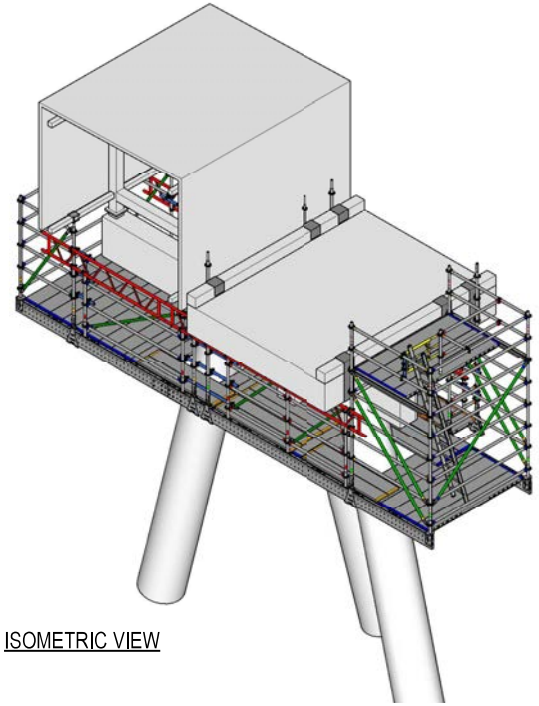

ISOMETRIC VIEW

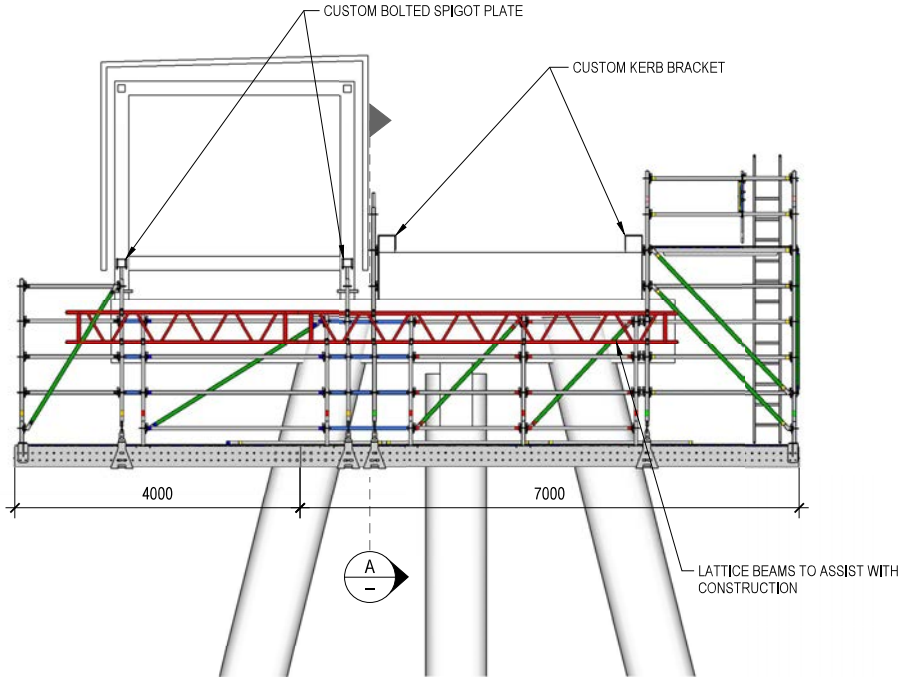

ELEVATION 1 --
SCALE: 1:75 @ A3

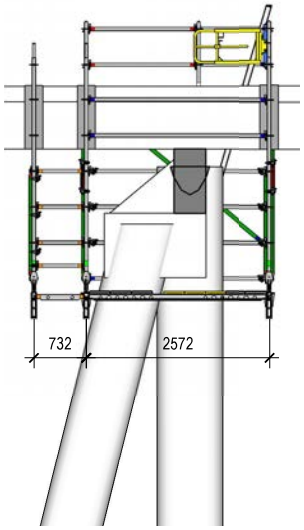

SECTION A --
SCALE: 1:75 @ A3

ALL SCAFFOLD TO BE RINGLOCK

CONCEPT ISSUE

REV	DATE	DESCRIPTION	DRWN	CHKD
A	13.05.2025	CONCEPT ISSUE, NOT FOR CONSTRUCTION	MJF	JJH

CLIENT	DRAWING TITLE
BENCHMARK	1 PILE ANCHOR BENT

PROJECT	JOB NO.	DWG.
LBST TYPICALS	250218	11

acrow. ENGINEERING & CONSTRUCTION

THIS DRAWING AND THE INFORMATION IT CONTAINS ARE THE PROPERTY OF ACROW GROUP OF COMPANIES IT IS NOT TO BE TRACED OR COPIED, NOR IS THE INFORMATION TO BE MISUSED IN ANY WAY.

Docusign Envelope ID: EFC52467-A2A0-4DE2-91D5-216F30602930

GENERAL NOTES

1. THIS DRAWING MUST BE PRINTED IN COLOUR.
2. THIS DRAWING TO BE READ IN CONJUCTION WITH ACROW DRAWING 250218-01.

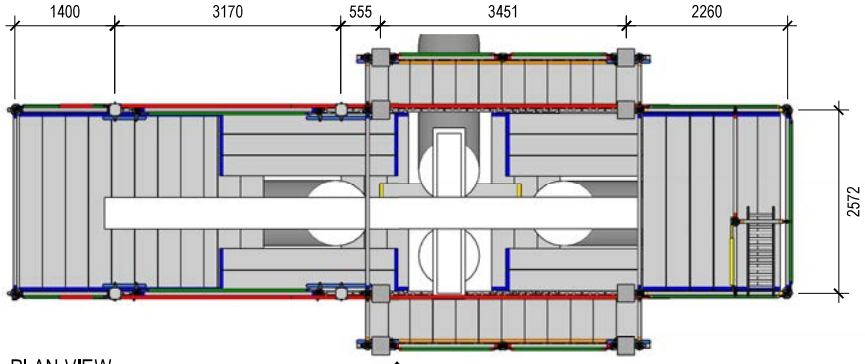

PLAN VIEW
SCALE: 1:75 @ A3

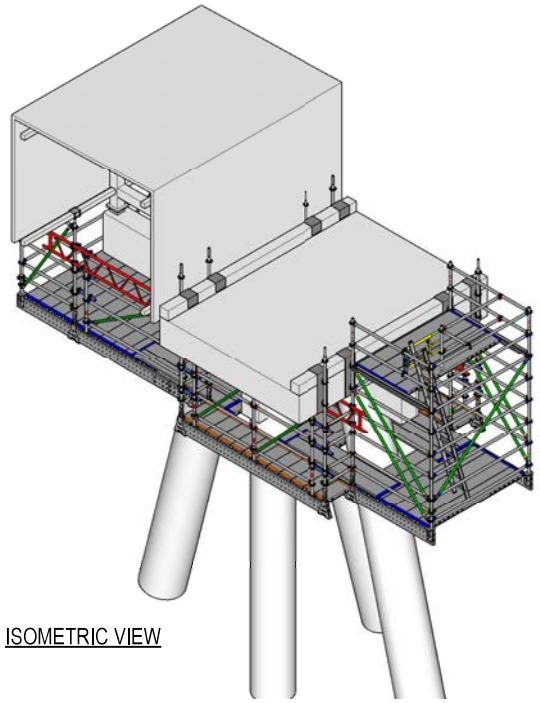

ISOMETRIC VIEW

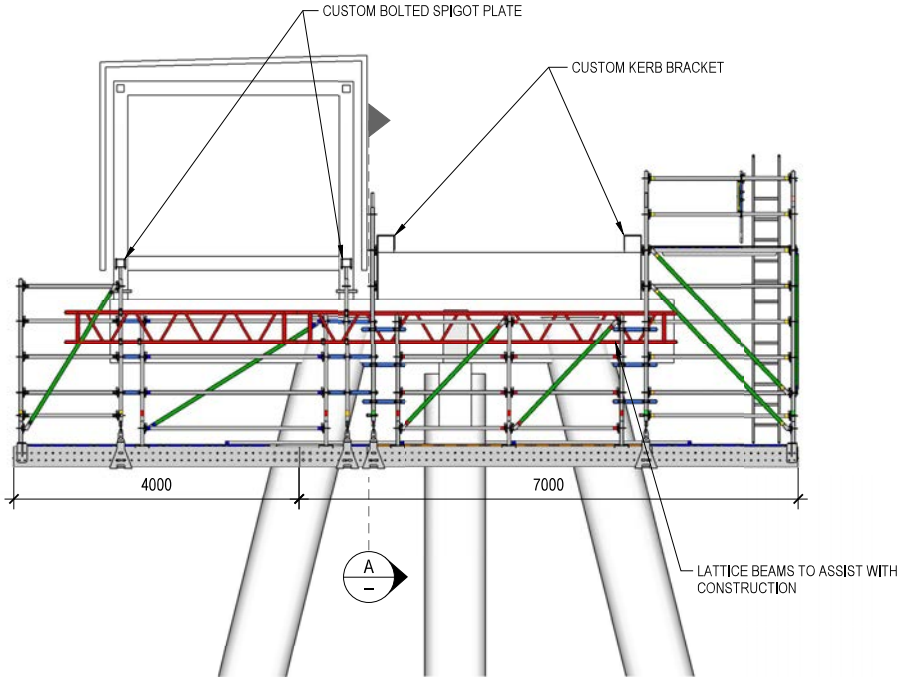

ELEVATION 1 / --
SCALE: 1:75 @ A3

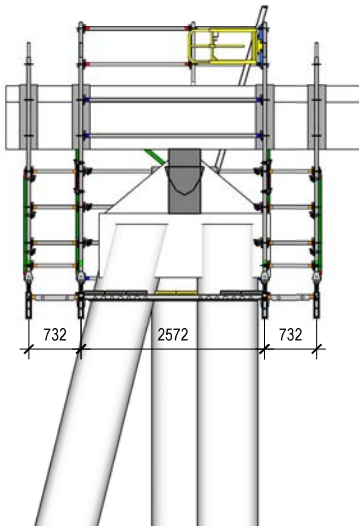

SECTION A / --
SCALE: 1:75 @ A3

ALL SCAFFOLD TO BE RINGLOCK

CONCEPT ISSUE

REV	DATE	DESCRIPTION	DRWN	CHKD
A	13.05.2025	CONCEPT ISSUE, NOT FOR CONSTRUCTION	MJF	JJH

CLIENT	DRAWING TITLE
BENCHMARK	2 PILE ANCHOR BENT

PROJECT	JOB NO.	DWG.
LBST TYPICALS	250218	12

acrow. ENGINEERING & CONSTRUCTION

THIS DRAWING AND THE INFORMATION IT CONTAINS ARE THE PROPERTY OF ACROW GROUP OF COMPANIES IT IS NOT TO BE TRACED OR COPIED, NOR IS THE INFORMATION TO BE MISUSED IN ANY WAY.

Docusign Envelope ID: EFC52467-A2A0-4DE2-91D5-216F30602930

GENERAL NOTES

1. THIS DRAWING MUST BE PRINTED IN COLOUR.
2. THIS DRAWING TO BE READ IN CONJUCTION WITH ACROW DRAWING 250218-01.

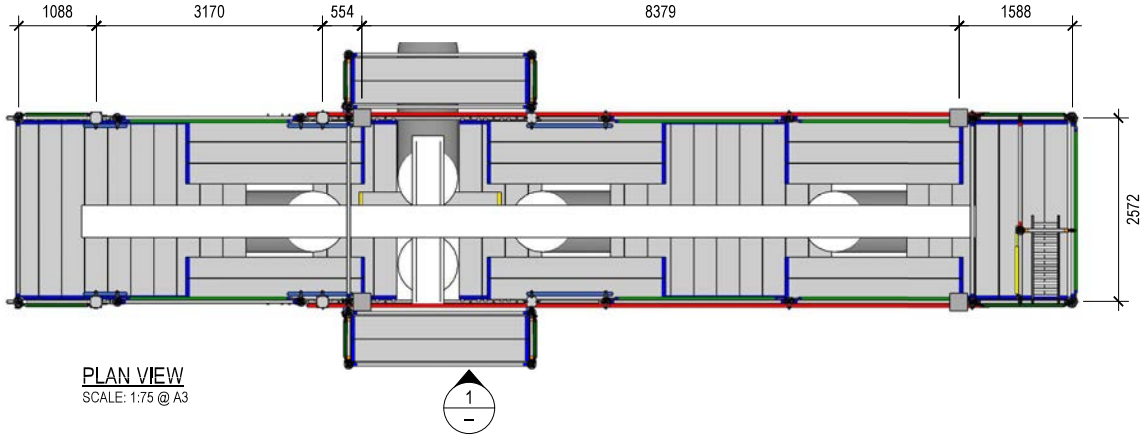

PLAN VIEW
SCALE: 1:75 @ A3

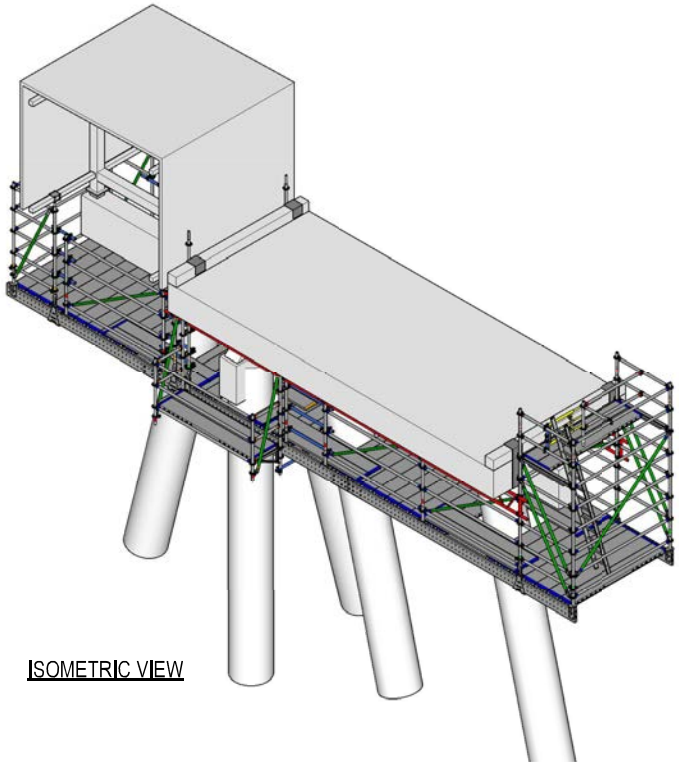

ISOMETRIC VIEW

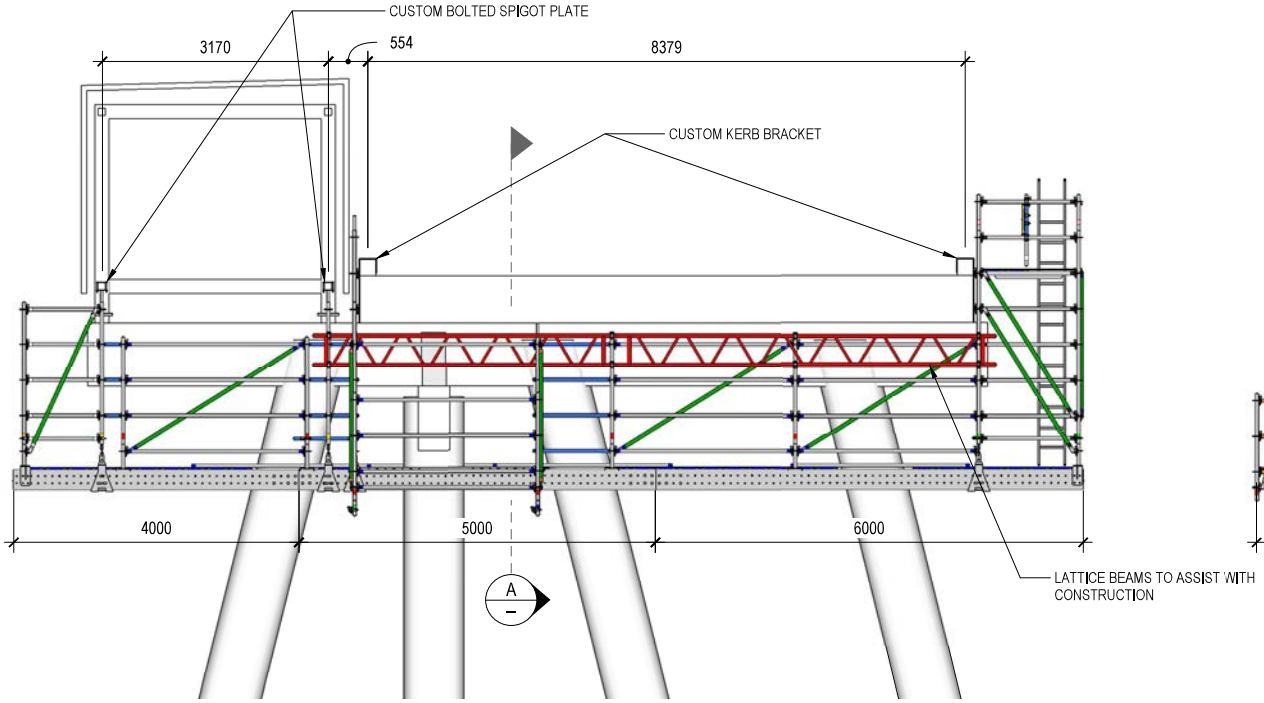

ELEVATION 1 / --
SCALE: 1:75 @ A3

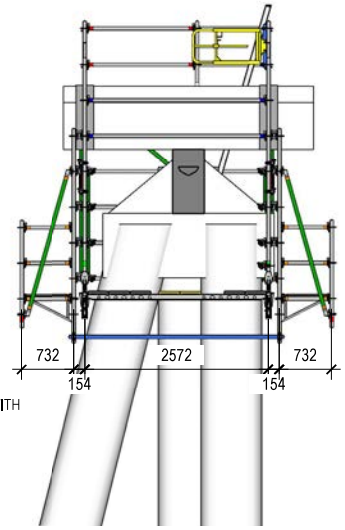

SECTION A / --
SCALE: 1:75 @ A3

ALL SCAFFOLD TO BE RINGLOCK

CONCEPT ISSUE

REV	DATE	DESCRIPTION	DRWN	CHKD
A	13.05.2025	CONCEPT ISSUE, NOT FOR CONSTRUCTION	MJF	JJH

CLIENT	DRAWING TITLE
BENCHMARK	PASSING BAY

PROJECT	JOB NO.	DWG.
LBST TYPICALS	250218	13

acrow. ENGINEERING & CONSTRUCTION

THIS DRAWING AND THE INFORMATION IT CONTAINS ARE THE PROPERTY OF ACROW GROUP OF COMPANIES IT IS NOT TO BE TRACED OR COPIED, NOR IS THE INFORMATION TO BE MISUSED IN ANY WAY.

Docusign Envelope ID: EFC52467-A2A0-4DE2-91D5-216F30602930

NOT TO SCALE

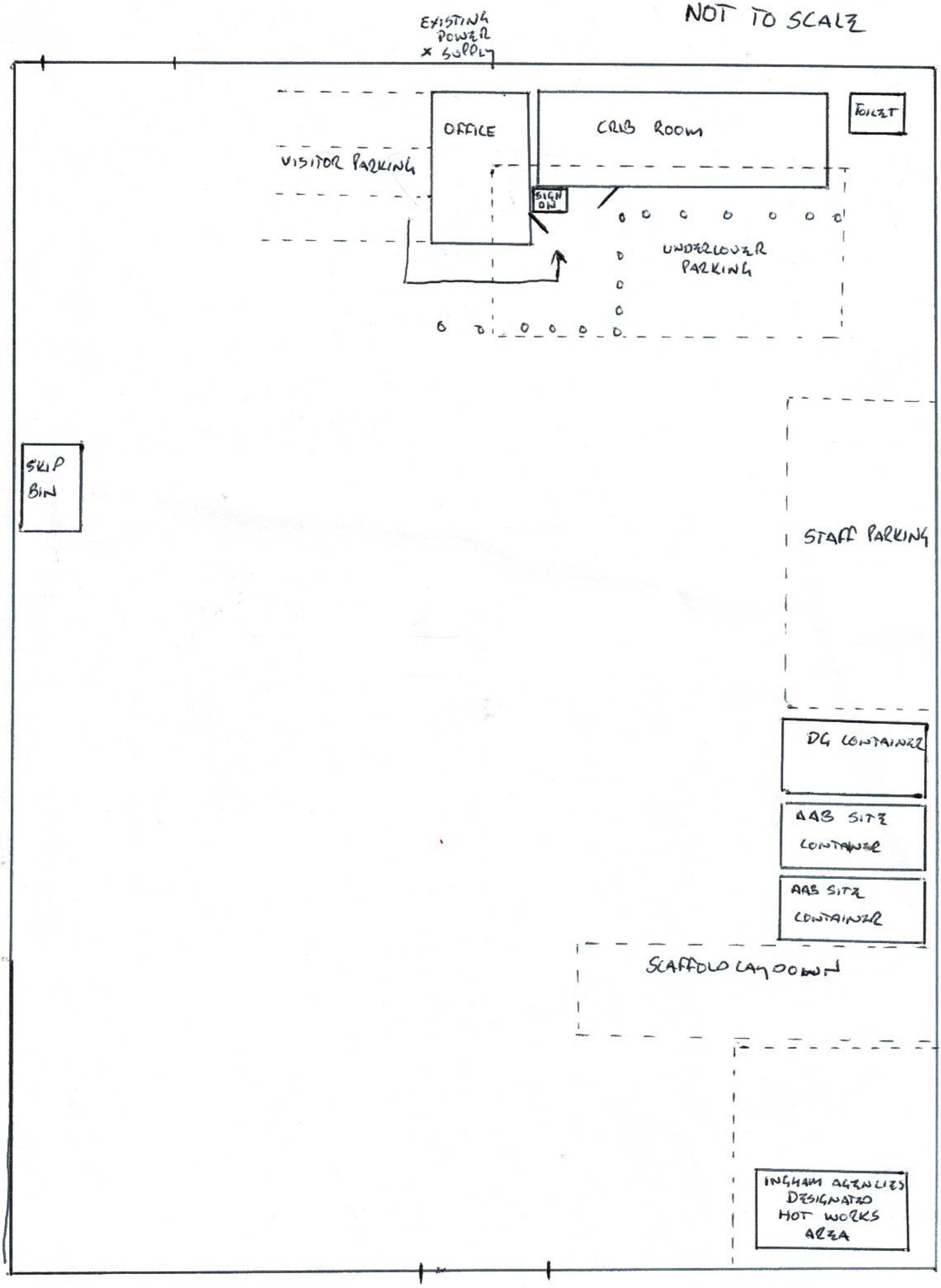

Docusign Envelope ID: EFC52467-A2A0-4DE2-91D5-216F30602930

RESPONSE SCHEDULES SCHEDULE H – SAFETY, ENVIRONMENTAL and QUALITY

Schedule H1.1 – Work Health and Safety Methodology

Please provide details on how the Tenderer proposes to minimise workplace health and safety risks during the performance of the WUC including:

1. ***Brief description of the Tenderer's safety management systems proposed to be used in performance of the WUC.***

CONTRACTOR SAFETY MANAGEMENT PLAN:

This plan will: Addresses all the specific WHS hazards and issues relevant to the Contractor' obligations under the Contract which can be reasonably anticipated or ascertained from time to time during the performance of the Contractor's obligations under the Contract;

Documents the system and control methods to be implemented for the performance of its obligations under the Contract. **Listed below**.

INDUCTIONS:

Advanced Aqua Blasting (AAB) will hold a formal **SITE SPECIFIC** induction for all AAB, Benchmark Scaffolding and Ingham Agencies and others who will be working on the project. QSL and the safety audit company will be invited to give presentations. QSL Lucinda site inductions will also take place.

This will be held at the function room of Slip Ways Restaurant at Dungeness Lucinda

AAB will conduct inductions as the need arises during the projects first and subsequent years.

WEEKLY TOOL BOX MEETINGS:

AAB will conduct documented weekly tool box meetings for all staff on the project, usually on a Monday.

Safety will be an agenda item with each work group invited to give a "**safety share**".

One of the "**NEVER EVERS**" will be an agenda item at each Tool Box meeting.

DAILY PRE START MEETINGS:

AAB will conduct documented daily pre start for the project as a whole with each work group conducting their own prestart. QSL staff will be invited to attend or an AAB supervisor will attend the QSL prestart.

DAILY SIGN ON / OFF

AAB will have a sign off / on book for all staff and visitors at the onshore site office.

AAB will **use QSL Swipedon appt** for sign on / off to assist in emergency evacuation procedures.

TRAFFIC MANAGEMENT PLAN:

AAB will have a traffic management plan for the roadway work areas. It will outline communication protocols, speed limits, load limits and vehicle parking requirements. It will have warning signage at the start and end of the work area as well as identifying gallery work areas with additional warning signage.

SAFE WORK METHOD STATEMENTS (SWMS):

AAB will have SWMS for all work procedures but paying particular to High Risk Work such as

Operation of mobile plant eg forklift (Licence required)

Working at heights - scaffold erection / dismantle (Certificate of Competency required)

Working over water and near an exposed edge

Working near a roadway

AAB will require all contractors engaged on the project to submit their SWMS for approval.

All SWMS will be **reviewed weekly or if circumstances change.**

WHS RISK ASSESSMENT:

AAB has policies and procedures in place to manage workplace risks.

These are communicated to staff through inductions, tool box and pre start meeting.

THIRD PARTY SAFETY AUDIT

AAB will engage a third party to conduct a safety audit as per S11.3 of the Contract General Specifications.

Docusign Envelope ID: EFC52467-A2A0-4DE2-91D5-216F30602930

2. ***Key identified safety risks and mitigations the Tenderer proposes to put in place***

ELECTRICAL: ELECTROCUTION

AAB will maintain an up to date **Electrical Equipment Register** that will document all electrical equipment on site with test due dates.

AAB and contractors will used Residual Current Devices (RCD) for all applications.

HIGH PRESSURE RELEASE: AIR / LIQUID

AAB will maintain a High Pressure Equipment Register that will record all pressure equipment on site with test due dates.

AAB and contractors have daily machinery pre start check books.

FIRE:

AAB will comply with QSL'S **Hot work permit** system and conditions.

AAB will have the appropriate indate fire extinguishers on site.

All staff will comply with QSL Lucinda's staff directions and Evacuation Plan.

WORKING OVER WATER: DROWNING

Harness and Fall arrest systems will be used when working near an exposed edge. (SWMS)

AAB will mark areas where Personal Flotation Devices (PFD) must be worn. (SWMS)

AAB will have rescue devices such as rope ladders, lifebuoys and throw ropes on site.

AAB will have a "MAN OVER BOARD RESCUE PLAN".

No working alone and AAB will have a list of trained first aiders, with 1 minimum always on site.

PEDESTRIAN AND VEHICLES ON ROADWAY:

AAB will have a **Traffic Management Plan** communicated to all Contractors and QSL staff**.**

FITNESS FOR WORK / FATIGUE MANAGEMENT:

AAB will conduct random drug / alcohol testing as per AAB Policy.

All staff working on the contract will submit to QSL random drug and alcohol testing when asked.

AAB and contractors will work 10 hour shifts, 6 days on and 1 day off. (24 hour) RDO.

Hydration, UV recognition, rest breaks will be a daily pre start agenda item.

STORAGE OF MATERIALS

AAB will have an approved Dangerous Goods Container (DG) for the storage of all coating material.

AAB will have in date Safety Data Sheets (SDS) for all material on site.

AAB will have an appropriate container on site for the storage on consumables, PPE etc.

Supervisors will conduct documented random site walk throughs to ensure safety standards are met.

REGULATED WASTE:

The removed coal tar epoxy coating is a regulated waste. This will be covered in the SWMS.

The regulated waste management is covered in the Environmental Management Methodology.

WEATHER: RAIN / STRONG WIND

Inclement weather, rain and or strong wind creates Health and Safety hazards for welding and scaffold erection and dismantling. Agreed stand downs will apply in these circumstances.

Work in the gallery applying Denso will be undertaken if feasible. The lock out procedure would apply.

SHIPPING:

No work in the C7B gallery during shipping.

HAZARD IDENTIFICATION AND INCIDENT REPORTING

Staff encouraged to report hazards / incidents immediately. Pre start agenda item for all work groups.

AAB's Workplace Compliance Officer (WCO) will be responsible for all hazards and incidents investigations and reporting.

Docusign Envelope ID: EFC52467-A2A0-4DE2-91D5-216F30602930

RESPONSE SCHEDULES SCHEDULE H – SAFETY, ENVIRONMENTAL and QUALITY

Schedule H2.1 – Environmental Management Methodology

Please provide details on how the Tenderer proposes to manage obligations and minimise risks to the environment including:

1. ***Brief description of the Tenderer's environmental management systems proposed to be used in performance of the WUC.***

INTERGRATED ENVIRONMENTAL MANAGEMENT SYSTEM (IEMS) V1 10/2024

Advanced Aqua Blasting (AAB) has an Integrated Environmental Management System (v11 10/2024) that was submitted as a condition of AAB's Environmental Protection Agency's licencing conditions in April 2002.

Although changes in the EPA'S licencing conditions have occurred over the years ibn regards to Abrasive blasting and protective coating AAB still adheres to the conditions, particularly the "Abrasive blasting over water" section of the IEMS.

The IEMS deals in detail with Environmental Relevant Activities ERA 57 2(a) Regulated Waste Transport. LICENCE NUMBER ENRE00252505 for fixed and mobile activities from Mackay north to the Torres Straights and west to Mount Isa.

INTERGRATED ENVIRONMENTAL MANAGEMENT SYSTEM: Notification of Emergencies / Incidents

This is an extract from the IEMS.
As soon as practicable after becoming aware of any emergency or incident which results in the release of contaminates not in accordance with this environmental licence AAB will advise the administrating authority the following information. (EPA or HSC) **and in this case QSL Lucinda**.

- Holder of Environmental Licence. Advanced Aqua Blasting
- Location of emergency or incident.
- Environmental Licence number. ENRE00252505
- Name and contact details of contact person from Advanced Aqua Blasting.
- Time of release of the contaminates.
- Time Advanced Aqua Blasting became aware of the release.
- Suspected cause of the release.
- Possible extent of the environmental harm.
- Actions taken and to be undertaken.
- Any other requested information.

ENVIRONMENTAL MANAGEMENT PLAN:

AAB has an Environmental Management Plan for this contract QSL – LBST - JPHR2025.

SPILL PREVENTION AND RESPONSE PROCEDURE:

AAB has a "*Spill prevention and Response Procedure*" that in detail outlines the response to a spill and the preventive measures that need to be in place at the workplace.

HAZARDOUS CHEMICALS:

AAB has a "*Hazardous Chemicals Policy*" and a "*Hazardous chemicals Management Procedure*" that AAB supervisors implement when setting up the work site, such as the placement of Spill Kits, Dangerous Goods containers and bringing the minimum daily amount of chemicals to the off shore work site.

WASTE MANAGEMENT:

The removed coal tar epoxy regulated waste will be collected at the headstock, placed in sealable bulk bags and transported to the on shore contractors yard to be collected on an as need basis by MAMS Industrial Services Industrial Estate Challands Street Ingham and disposed of according to MAM's licence conditions.

All relevant EPA paper work will be completed and available for viewing.

Recyclable waste such as paint tins will be transported to AAB Challands Street depot for correct disposal.

All other non recyclable trade waste from the work site will be disposed of in an industrial bin at the contractor lay down yard collected by MAMS Industrial Services weekly.

Docusign Envelope ID: EFC52467-A2A0-4DE2-91D5-216F30602930

2. *Key identified environmental risks and mitigations the Tenderer proposes to put in place*

CHEMICAL SPILL:

AAB will be conduction diesel refuelling of its plant, welder generators, compressors, forklift off shore. An appropriate approved Spills Kit will be kept on the refuelling vehicle.
This activity has a SWMS that staff who do the refuelling will be familiar with.

Paint mixing will be in the original container which will be placed in a plastic bund dish before the paint tin is opened and mixing takes place. A Spills Kit will be inplace. Only the minimum daily requirements of paint and thinners will be taken off shore and stored in the DG container.

Painting equipment cleaning will also take place in a plastic bund dish. All used cleaning solvents will be stored in the original container, marked as used (SLOPS) and returned onshore to the contractors lay down yard for disposal.

RELEASE OF REGULATED WASTE

The removed coating material from the headstock and piles is coal tar epoxy. This is classified as a **regulated waste** and handling and disposal need to be considered.

AAB will fully encapsulate the headstock (SWMS) for abrasive blasting so that the removed coal tar epoxy and the used garner can be recovered. This will be done in a combination of manual and mechanical methods. (SWMS). The amount of recovered material will be approximately 1 tonne per headstock.

Due to the small amount of waste generated, the encapsulation is not negative pressure so a small amount of “nuisance dust” will escape. This is acceptable as it is used garnet.

If a large release of the regulated waste takes place, AAB’;s notification procedure will begin.

FAUNA

The Lucinda port limits which are defined in the regulations of the Transport Infrastructure Act 1994 extend between 8.5 to 10 kilometres from the shore. The whole port lies within the Great Barrier Reef World Heritage Area and borders the Hinchinbrook Island National Park and the Hinchinbrook Channel National Park.

Due to the site of the works, there is significant risks to the fauna – birds and fish that need to be addressed. This will happen in the Environmental Management Plan, Construction Management Plan, Inductions, Tool Box and pre start meetings.

The birds resting nesting on the jetty will be covered in the inductions” all birds have right of way” and what to do if an injured bird is encountered.

ACCCIDENTAL NON REGULATED WASTE RELEASE:

The most common way for waste to enter the water is from the tray of a moving vehicle on the roadway. All vehicles used in the contract will have a cargo net to prevent this happening. Failure to use the net will be a disciplinary offence.

Rubbish bins will be at all work site and the contents taken on shore daily.

AAB will position a portable toilet on the passing bay closest to the work site.

There will be “no smoking or vaping” off shore. Failure to comply will be a disciplinary offence.

Docusign Envelope ID: EFC52467-A2A0-4DE2-91D5-216F30602930

RESPONSE SCHEDULES SCHEDULE H – SAFETY, ENVIRONMENTAL and QUALITY

Schedule H3.1 – Quality Management Methodology

Please provide details on how the Tenderer proposes to achieve high levels of quality control and quality assurance during performance of the WUC including:

1. ***A description of the Tenderer's proposed quality management systems to be used in performance of the WUC.***

Quality Management:

Advanced Aqua Blasting (AAB) if successful with this tender will engage **The APP Group Townsville** to conduct an audit review upgrade of all of AAB's QA practices and procedures to ensure tender compliance.

This audit review upgrade will look at electronic quality assurance management and ensure that all records such as photographic records, results of the Dilapidation survey, coating inspection reports and non compliance and rectification reports, Inspection and Test Plans (ITP) completed and underway are recorded on a work lot headstock number. This work lot containing all records will be available electronically to the Principal or 3rd party auditors engaged by the Principal.

AAB will have as part of its Key Personnel a full time Protective Coatings QA/QC Officer supplied by The APP Group. This QA/QC Officer will also train a NACE accredited (or booked to do a NACE Level 1) AAB staff member to cover for RDO's and other work absences.

AAB will submit a **Quality Project Management Plan** that complies with *Contract General Specification S9.2 Quality Management Plan.*

AAB has an ITP's that covers all the points outlined in the *Contract General Specification S9.3 Inspection and Test Plans.*

AAB has Painting Contractors Certification Programme (PCCP) accreditation. AAB has held this certification since 2010.

Certification is Class 1 Shop Application – Open Yard, Class 2 Shop Application – Enclosed Blast Cleaning Paint Application, Class 3 Field Application – Atmospheric Exposure Service, Class 4 Field Application – Immersion Service

2. ***A description of the Tenderers proposed Quality Assurance testing and reporting methodology.***

Protective Coating Testing:

The full time QA/QC Officer will conduct or supervise all testing on the protective coatings works and complete the relevant section of the ITP.

The NACE 1 AAB Site Supervisor will be present for this testing. This is especially important if defects are identified.

Below is an extract from an ITP on the application of the first coat:

Remarks/Records *(eg: Test Frequency, Reports, Certificates, Checklists, etc.)*

Ensure coating application down the 500mm clean abrasive blasted section of the pile under the headstock. This is to ensure a clean surface for the application of the Denso Seashield jacket.

Remove all spent abrasive and residual dust by using dry compressed air, sweeping with a clean brush or vacuum cleaning prior to application of the coating. Avoid handling blasted steel with bare hands.

The surface must be inspected prior to coating application to ensure neither surface defects nor contamination exist, otherwise solvent clean rectification will be required before any coating is applied.

Apply initial coating within a four (4) hour period after blasting or before any surface deterioration occurs.

Docusign Envelope ID: EFC52467-A2A0-4DE2-91D5-216F30602930

Wet Film Test daily on first area coated and then on each painted area coated as required. Record on AS3894.14 Inspection Report Daily Painting or similar. Dulux Protective Coatings Specification; PCQ-115-0121-4 Section 7.5.0 Records

All coating materials supplied is by an Australian Paint Approval Scheme (APAS) recognised manufacturer – Dulux Australia

Dulux Protective Coatings Specification; PCQ-115-0121-4 Section 7.3.1 Approved Wet Film Gauge is to be used during application to minimise the possibility of low dry film thicknesses and in accordance with AS3894.3.

Protective Coating Reporting Methodology.

All AS Inspection sheets used and the ITP will be recorded under the (headstock) work lot number as will any rectification repairs. This will initially be a paper recording until entered into the electronic data base with photos for each headstock work lot.

AS 3894.10 Inspection Report -Daily

AS 3894.11 Equipment Report.

AS 3894.12 Inspection Report- Coating

AS 3894.13 Inspection Report – Daily.

AS 3894.14 Inspection Report – Daily Painting

Daily Surface and Ambient conditions will be measured. The results will be recorded on **AS 3894.10 Inspection Report – Daily Surface and Ambient Conditions.**

An **AS 3894.11 Equipment Report** will be completed recording all testing equipment brand and calibration due date.

Paint Containers will be clearly labelled with manufacturer's name, product type, colour and batch number. This will be recorded on **AS 3894.13 Inspection Report – Daily Blast and Paint.**

The surface profile will be recorded on **AS 3894.13 Inspection Report – Daily Blast and Paint.**

Wet film thickness will be measured in accordance with **AS 3894.3** and recorded on **AS 3894.13** Inspection Report – Daily Blast and Paint.

Dry film thickness shall be measured in accordance with AS 3894.3 and recorded on AS 3894.14 Inspection Report – Daily Painting.

Rectification **and Touch-up Painting.**

Surfaces where the paint coating has been damaged, failed Dry Film Testing or marked in any way will be touched up or repainted in accordance with the instructions *Dulux Protective Coatings Specification; PCQ-115-0121-4 Section* 8.1.0 Repair of Damaged Coating.

Treatment will be: Pre-clean the damaged area. (2) Remove the damaged coating back to a sound adherent surface. (3) Clean the damaged area in accordance with Section 6.2 of this Specification. (4) Feather back the repair area by a minimum 50mm overlap by low pressure whip abrasive blasting, sanding or hand tools. (5) Clean surface to remove dust. (6) Build up the repair area using the same type of paints and same dry film thickness as specified.

Docusign Envelope ID: EFC52467-A2A0-4DE2-91D5-216F30602930

Structural Steel – Testing and weld repairs.

The full time QA/QC Officer will conduct or supervise all testing on the steel inspection and welding works and complete the relevant section of the ITP.

AAB will use the Pile Condition Inspection Sheet for detailed recording so that weld patches can be cut. A similar Headstock Inspection Sheet will be designed and used.

AAB will use a calibrated ultrasonic thickness gauge and remove a small amount of corrosion from the surface with a grinder/flapper disc to achieve a thickness reading. The inspection procedure shall be as follows:

AAB will refer to Aurecon Drawing 1 Approach Jetty Typical Repair Details and Drawing 2 Structural Utilisation Assessment diagram/drawing for the particular pile or headstock.

Steel Repair and Identification Reporting Methodology.

All Pile and Headstock Inspection sheets used and the ITP will be recorded under the (headstock) work lot number as will all welding repairs both pad and patch. This will initially be a paper recording until entered into the electronic data base with photos for each headstock work lot.

3 Key identified quality risks and mitigations the Tenderer proposes to put in place.

Surface contamination**.**

Protective coating will NOT be performed in the following circumstances:

If the surface is wet, or likely to become wet after abrasive blasting and drying with compressed air or if the clean surface has failed the salt test.

On surface where the formation of condensation is likely i.e. where the surface temperature of steel is less than 3°C above dew point.

When the relatively humidity of the surrounding air is above 85%.

When the ambient temperature, or the surface temperature, exceeds 50°C or is less than 5°C.

Incorrect product Part A and B quantities and insufficient mixing.

AAB will have available at the workplace Dulux Product Data Sheets for the products being applied. DUREMAX GFX and epoxy thinners as the use of thinner (solvents) other than nominated for each coating in the relevant Technical Data Sheet may impair performance of the coating.

Stripe coating.

Prior to the spray application of each coating all edges, bolts and boltholes (including slots) shall be stripe coated by brush method. Staff will pay particular attention to achieving adequate DFT at edges by Stripe Coating to ensure long service life

The coating should be protected from the elements and contamination during coating cure to achieve maximum life.

Lines of communication: For ITP Witness and Hold points.

The ABB Project Manager will maintain a 1-week estimated look ahead of expected activities, Hold Points and Witness Points for both welding activities and protective coating and will provide at least one Business Days' notice of all Hold Points and Witness Points.

Docusign Envelope ID: EFC52467-A2A0-4DE2-91D5-216F30602930

Typical Scaffold Design

- Southern end of the scaffold to be supported from the roadway kerbs with engineered fabricated brackets.
- Access the northern end of the roadway, the scaffolders will need to remove the hood under the conveyor to access.
- Lattice Beam to be installed under roadway to installed additional components for the working deck.

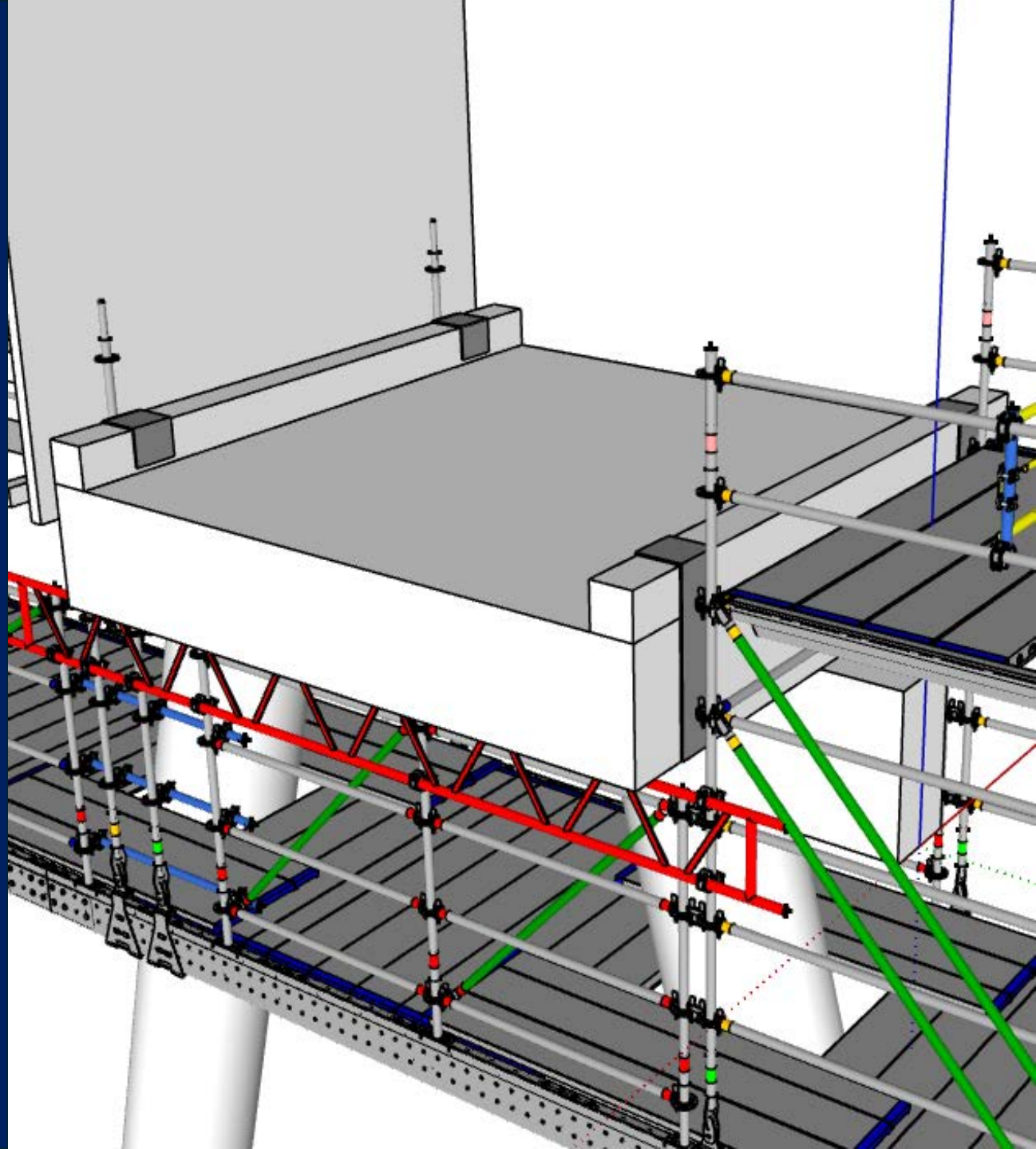

Docusign Envelope ID: EFC52467-A2A0-4DE2-91D5-216F30602930

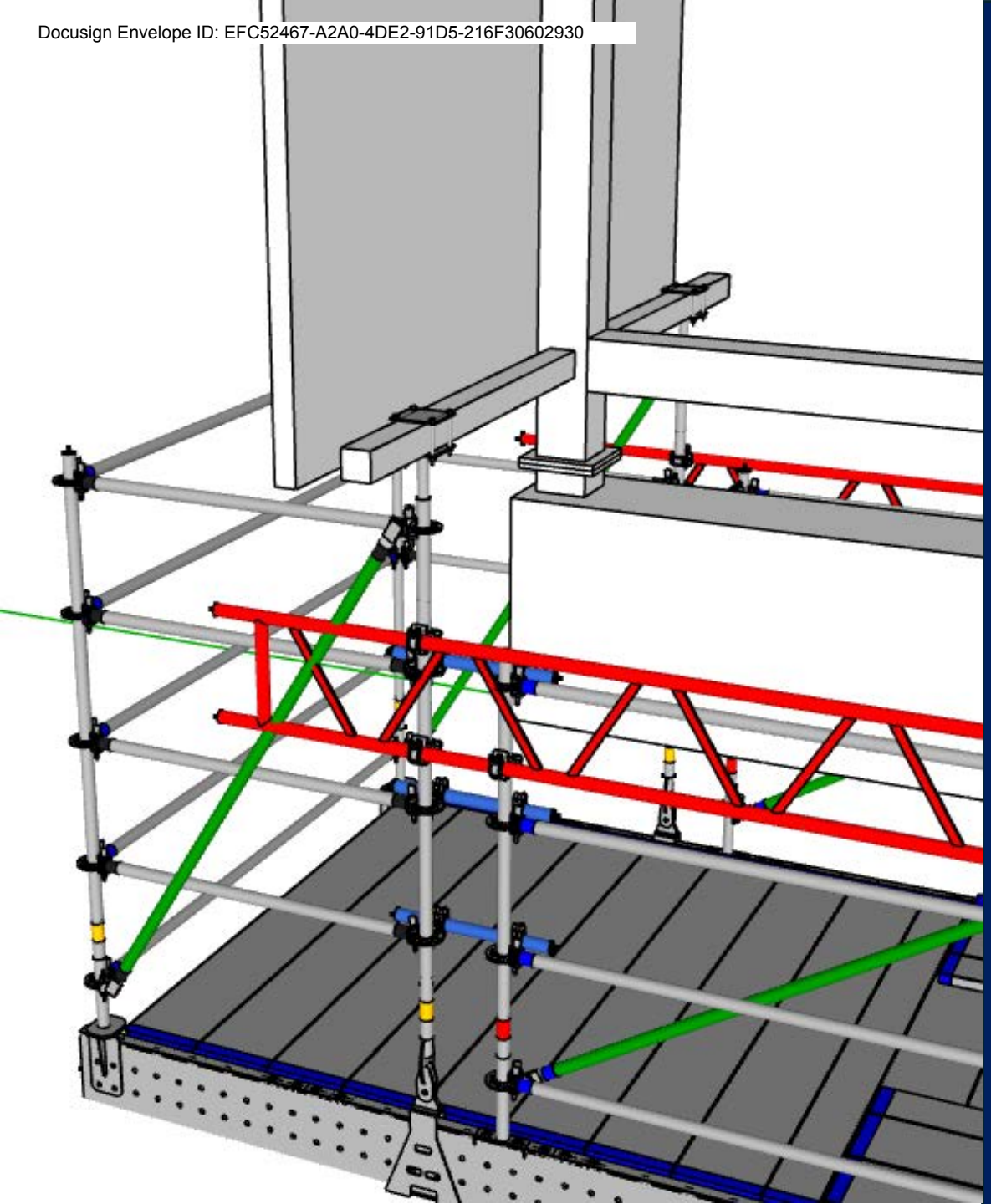

Typical Scaffold Design

- Northern end of the scaffold will be supported from another specific engineered bracket clamping to the conveyor frame underneath.
- Doing it this way, we can eliminate the need for AAB to come back after the scaffold is remove to do touch ups.
- Once in place, extend another Lattice beam to this connection and complete the installation of the working deck.

Docusign Envelope ID: EFC52467-A2A0-4DE2-91D5-216F30602930

Typical Scaffold Design

- Six scaffolds will be built with 4 available for abrasive blasting, painting, welding and Denso jacket fitting at any one time.
- One scaffold will be in the process of dismantling with another in the process of erection.
- Scaffold will be built on Priority A Pilebent 257 first with work proceeding out to Pilebent 281.

- Removal of the scaffold will be the same steps but in reverse.
  - The removed scaffold should be able to fit onto the back of the truck for relocation to the next pilebent site.

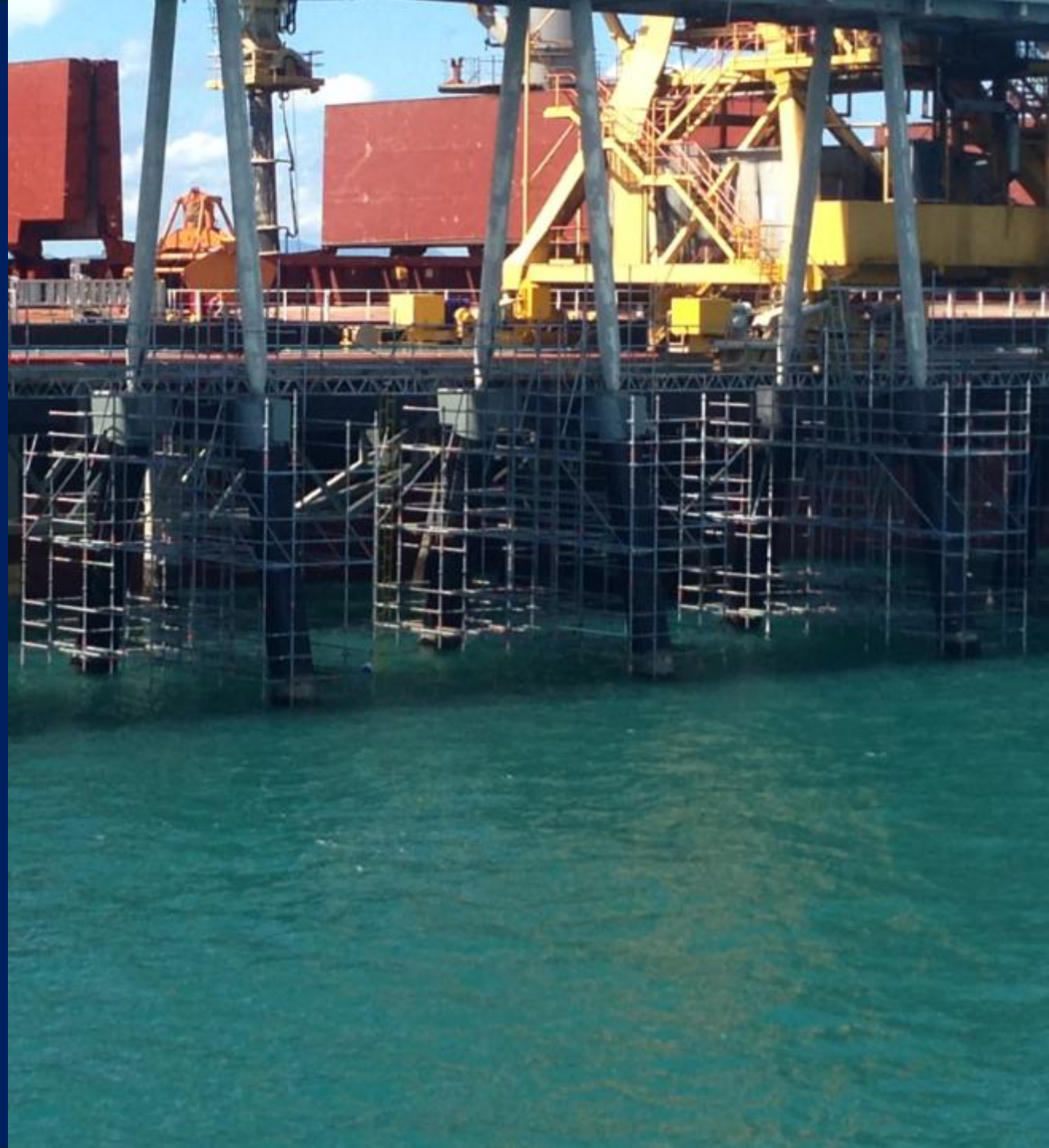

Docusign Envelope ID: EFC52467-A2A0-4DE2-91D5-216F30602930

Scaffolding Design

Typical Bay

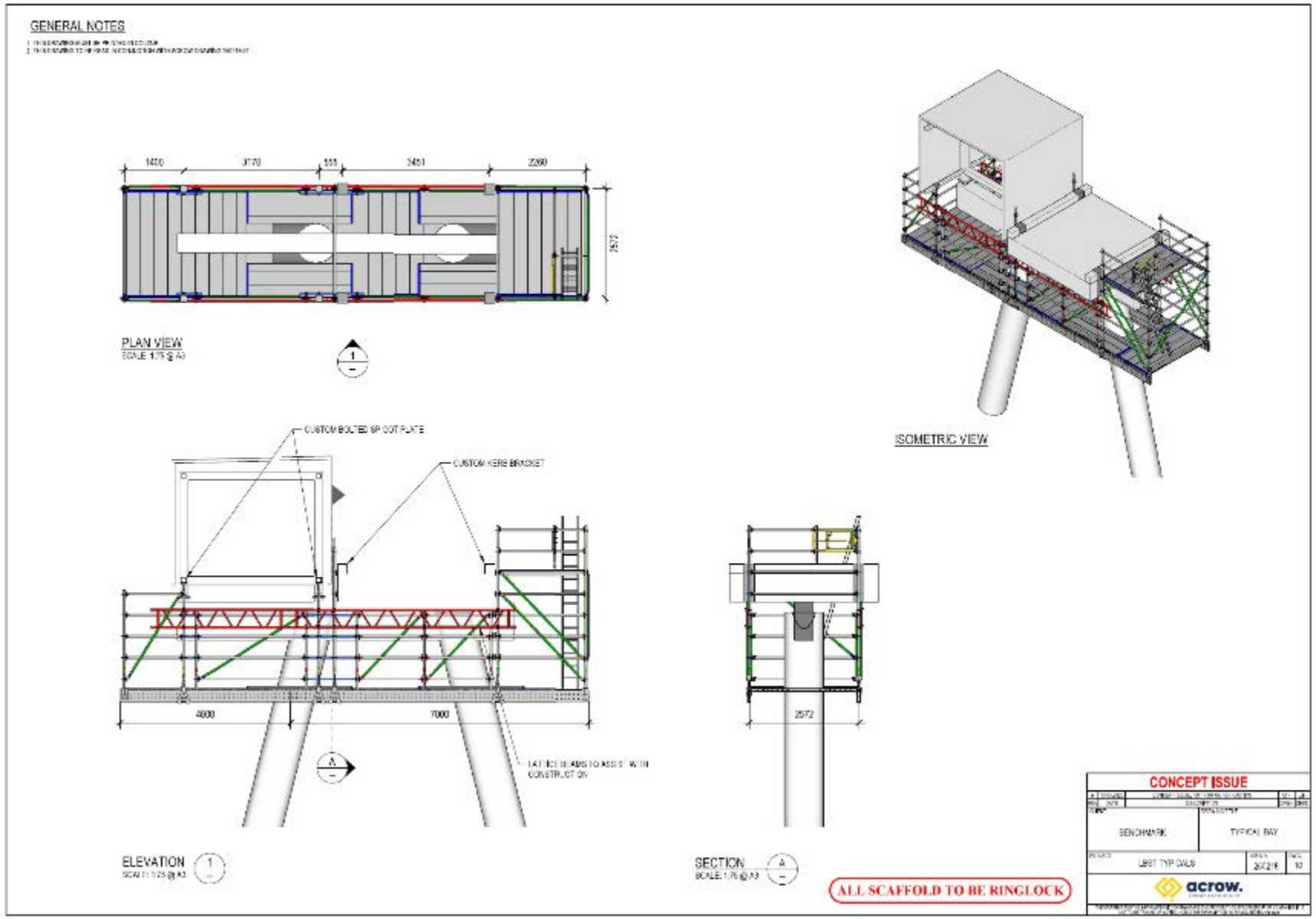

Docusign Envelope ID: EFC52467-A2A0-4DE2-91D5-216F30602930

Scaffolding Design

1 Pile Anchor Bent

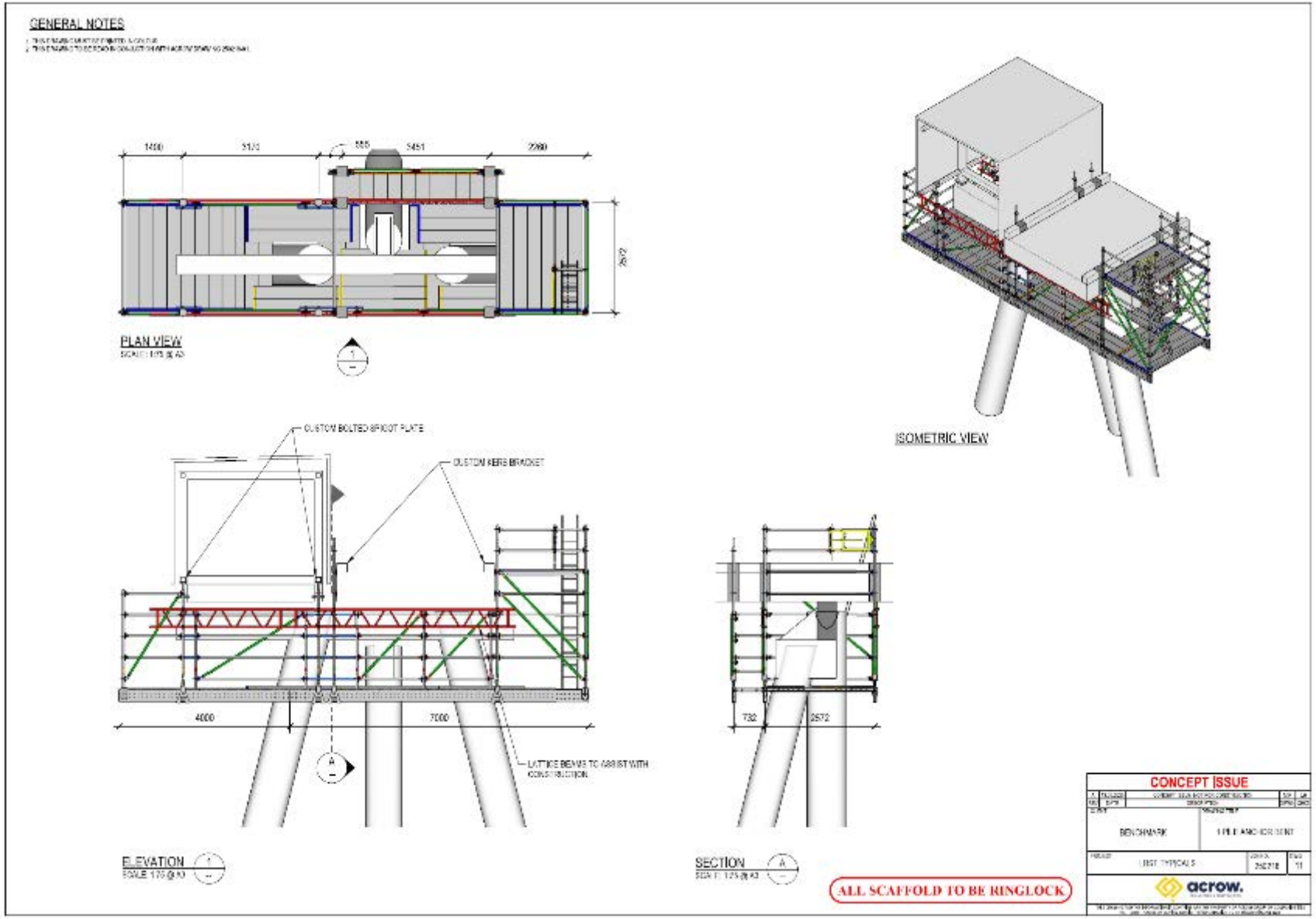

Docusign Envelope ID: EFC52467-A2A0-4DE2-91D5-216F30602930

Scaffolding Design

2 Pile Anchor Bent

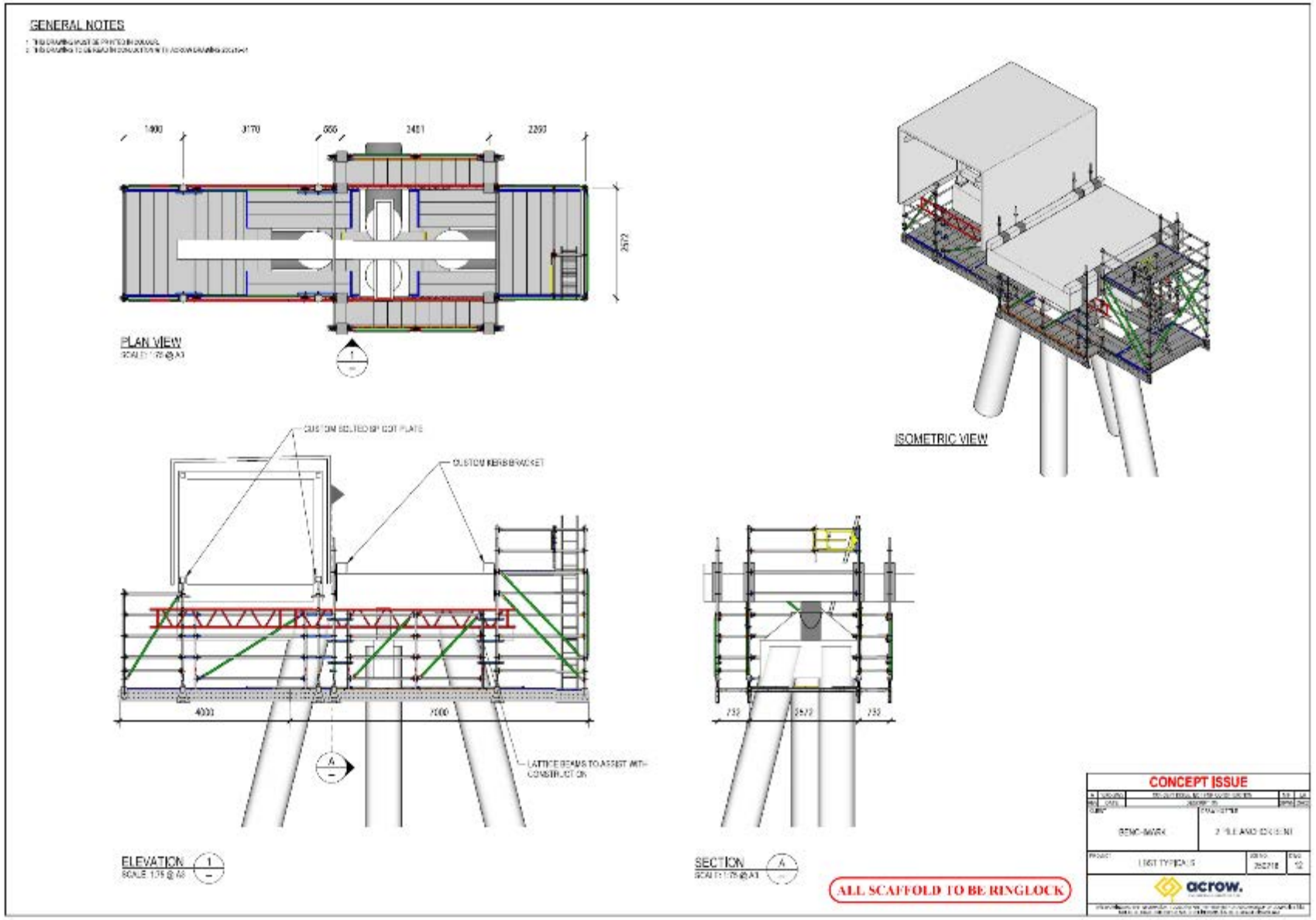

Docusign Envelope ID: EFC52467-A2A0-4DE2-91D5-216F30602930

Scaffolding Design

Passing Bay

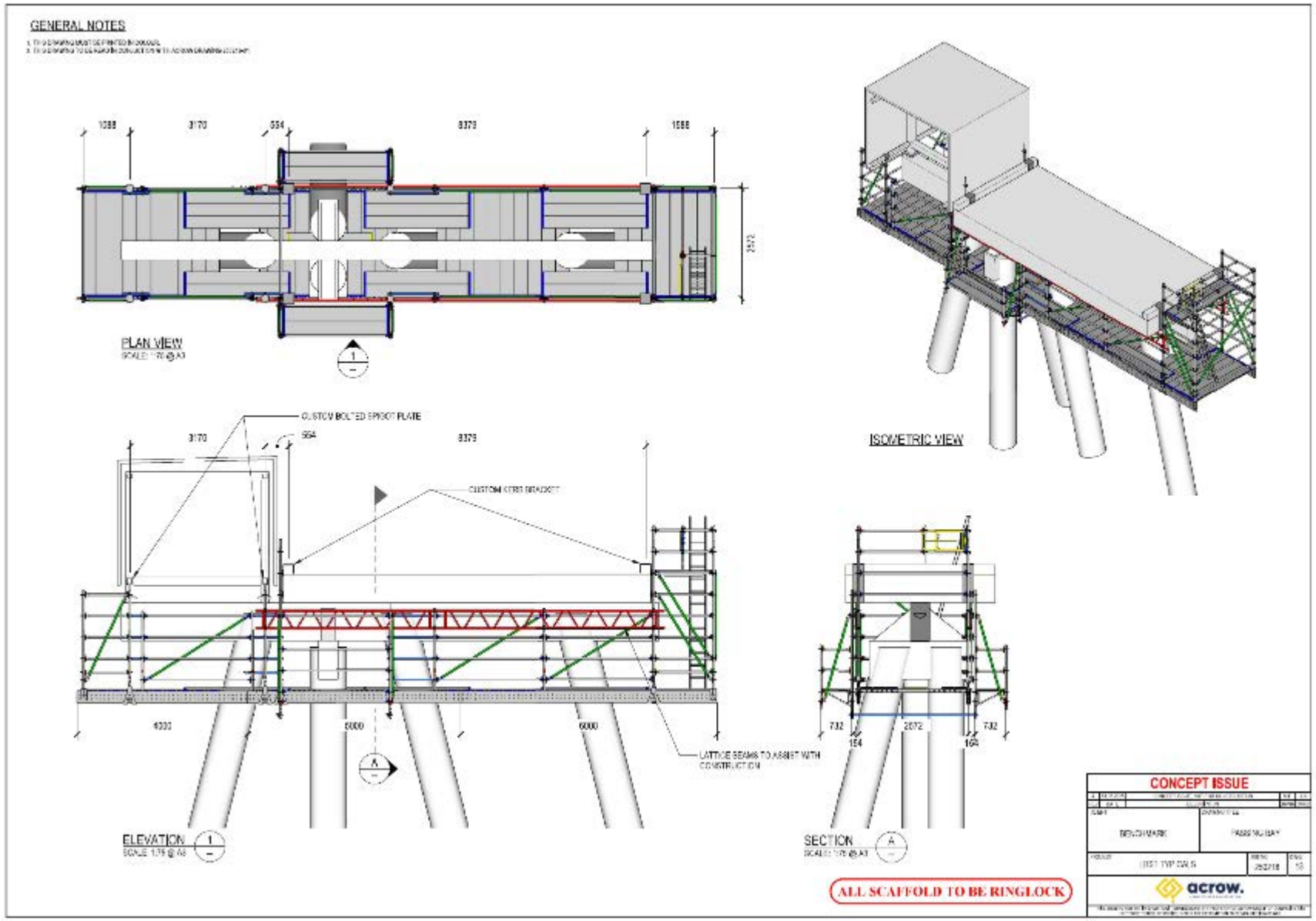

Docusign Envelope ID: EFC52467-A2A0-4DE2-91D5-216F30602930

Scaffold on one pilebent with another scaffold in use on another pilebent

Docusign Envelope ID: EFC52467-A2A0-4DE2-91D5-216F30602930

Pressure water washing

Pressure water washing will be used to remove salt on the headstock after welding repairs and before abrasive blasting as per specifications listed in Dulux PCQ-015-0121-4/A.
Testing for residual salt will be as per AS 3894.6 with a salt test of < 50ppm acceptable.

Docusign Envelope ID: EFC52467-A2A0-4DE2-91D5-216F30602930

Welding repairs

All welders shall have the qualifications requirements of Clause 4.12.2.3 of AS/NZS 1554.1 and others requirements stated in the contract QSL–LBST-JPHR2025

Docusign Envelope ID: EFC52467-A2A0-4DE2-91D5-216F30602930

AURECON

Structural Utilisation

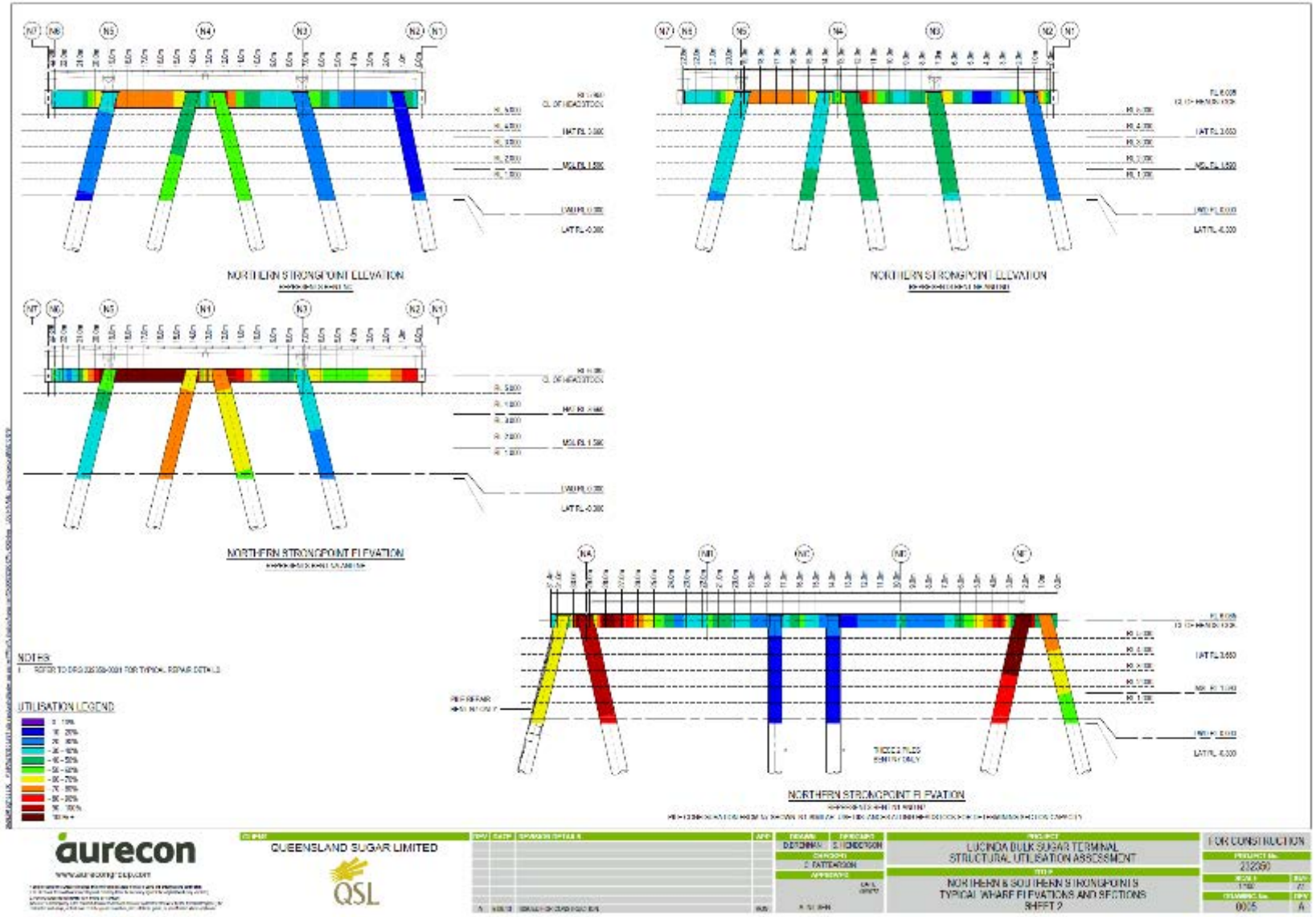

Docusign Envelope ID: EFC52467-A2A0-4DE2-91D5-216F30602930

Protective coating application on the headstock

AAB applicators are familiar and experienced with the product being applied, Dulux DUREMAX GFX.
AAB will comply with all the product application
QA specifications listed in Dulux PCQ-015-0121-4/A

Docusign Envelope ID: EFC52467-A2A0-4DE2-91D5-216F30602930

Application of

Denso Grease and Tape on steel piles

SPECIFICATION:
Denso Engineering
Specification Sea Shield series 2000
Grease and Tape application

Docusign Envelope ID: EFC52467-A2A0-4DE2-91D5-216F30602930

Denso Seashield jacket fitting

SPECIFICATION:
Denso Engineering Specification
Sea Shield series 2000
Jacket fitting

Docusign Envelope ID: EFC52467-A2A0-4DE2-91D5-216F30602930

Reporting works schedule Pilebent 257 258 259 260 262 263

ID	Task Name	Duration	Start	Finish	Predecessors	Text1
1						
2	**Separable Portion 1**	**24 days**	**Mon 15/09/25**	**Sat 11/10/25**		
3	**#257 with underpass**	**15 days**	**Mon 15/09/25**	**Wed 1/10/25**		
4	Install Scaffold	3 days	Mon 15/09/25	Wed 17/09/25		81
5	Washing, encapsulation, top jacket	1 day	Thu 18/09/25	Thu 18/09/25	4	
6	Welding	3 days	Fri 19/09/25	Mon 22/09/25	5	
7	Blast and paint (R)	4 days	Tue 23/09/25	Fri 26/09/25	6	
8	Denso (Pile)	2 days	Sat 27/09/25	Mon 29/09/25	7	
9	Dismantle Scaffold	2 days	Tue 30/09/25	Wed 1/10/25	8,15	01
10	**#258 Typical**	**11 days**	**Thu 18/09/25**	**Thu 2/10/25**		
11	Install Scaffold	2 days	Thu 18/09/25	Fri 19/09/25	4	82
12	Washing, encapsulation, top jacket	1 day	Sat 20/09/25	Sat 20/09/25	11	
13	Welding	2 days	Tue 23/09/25	Wed 24/09/25	6,12	
14	Blast and paint (R)	3 days	Fri 26/09/25	Mon 29/09/25	13	
15	Denso (Pile)	2 days	Tue 30/09/25	Wed 1/10/25	14	
16	Dismantle Scaffold	1 day	Thu 2/10/25	Thu 2/10/25	9	02
17	**#259 Typical**	**11 days**	**Sat 20/09/25**	**Sat 4/10/25**		
18	Install Scaffold	2 days	Sat 20/09/25	Mon 22/09/25	11	83
19	Washing, encapsulation, top jacket	1 day	Tue 23/09/25	Tue 23/09/25	18	
20	Welding	2 days	Thu 25/09/25	Fri 26/09/25	13,19	
21	Blast and paint (R)	3 days	Mon 29/09/25	Wed 1/10/25	20	
22	Denso (Pile)	2 days	Thu 2/10/25	Fri 3/10/25	15	
23	Dismantle Scaffold	1 day	Sat 4/10/25	Sat 4/10/25	22	03
24	**#260 Typical**	**11 days**	**Tue 23/09/25**	**Tue 7/10/25**		
25	Install Scaffold	2 days	Tue 23/09/25	Wed 24/09/25	18	84
26	Washing, encapsulation, top jacket	1 day	Thu 25/09/25	Thu 25/09/25	25	
27	Welding	2 days	Sat 27/09/25	Mon 29/09/25	20,26	
28	Blast and paint (R)	3 days	Wed 1/10/25	Fri 3/10/25	27	
29	Denso (Pile)	2 days	Sat 4/10/25	Mon 6/10/25	28	
30	Dismantle Scaffold	1 day	Tue 7/10/25	Tue 7/10/25	29	04
31	**#262 Typical**	**11 days**	**Thu 25/09/25**	**Thu 9/10/25**		
32	Install Scaffold	2 days	Thu 25/09/25	Fri 26/09/25	25	85
33	Washing, encapsulation, top jacket	1 day	Sat 27/09/25	Sat 27/09/25	32	
34	Welding	2 days	Tue 30/09/25	Wed 1/10/25	27,33	
35	Blast and paint (R)	3 days	Fri 3/10/25	Mon 6/10/25	34	
36	Denso (Pile)	2 days	Tue 7/10/25	Wed 8/10/25	29	
37	Dismantle Scaffold	1 day	Thu 9/10/25	Thu 9/10/25	36	05
38	**#263 Typical**	**11 days**	**Sat 27/09/25**	**Sat 11/10/25**		
39	Install Scaffold	2 days	Sat 27/09/25	Mon 29/09/25	32	86
40	Washing, encapsulation, top jacket	1 day	Tue 30/09/25	Tue 30/09/25	39	
41	Welding	2 days	Thu 2/10/25	Fri 3/10/25	34,40	
42	Blast and paint (R)	3 days	Mon 6/10/25	Wed 8/10/25	41	
43	Denso (Pile)	3 days	Thu 9/10/25	Sat 11/10/25	36	
44	Dismantle Scaffold	1 day	Fri 10/10/25	Fri 10/10/25	37	06

Docusign Envelope ID: EFC52467-A2A0-4DE2-91D5-216F30602930

Reporting works schedule

LBST SR1213

04-04-2013

ID		Task Name	Duration
1		**Lucinda Ship Loader Rail Clip Replacement**	**28 days**
2	✓	**Preliminaries**	**2 days**
3	✓	Construction of Access System Completed	0 days
4	✓	Survey of Existing Rail Alignment	0 days
5	✓	Site Establishment	2 days
6		**Removal of Rail**	**3 days**
7		Removal of Rail and pad and thickness inspection	3 days
8		**Rail Clips Stage 1**	**7 days**
9		Removing of rail clip studs	2 days
10		Complete removal of clip bases as required	1 day
11		Alignment and welding of rail clip studs	4 days
12		**Rest Break**	**2 days**
13		2 day break	2 days
14		**Blast and Paint**	**9 days**
15		Blast and Paint Headstock	2 days
16		Blast and Paint Rail	3 days
17		Blast and Paint Rail	3 days
18		**Rail Clips Stage 2**	**7 days**
19		Removing of rail clip studs	2 days
20		Complete removal of clip bases as required	1 day
21		Alignment and welding of rail clip studs	4 days
22		**Prepare for reinstallation**	**1 day**
23		Construction of tapered grout pad or welding of rail fc	1 day
24		**Rest Break**	**3 days**
25		3 day break	3 days
26		**Blast and Paint**	**3 days**
27		Blast and Paint Headstock	3 days
28		**Reinstallation of Rail**	**6 days**
29		Survey for New Rail Alignment	1 day
30		Installation and Alignment of rail, rail pad and rail clip:	3 days

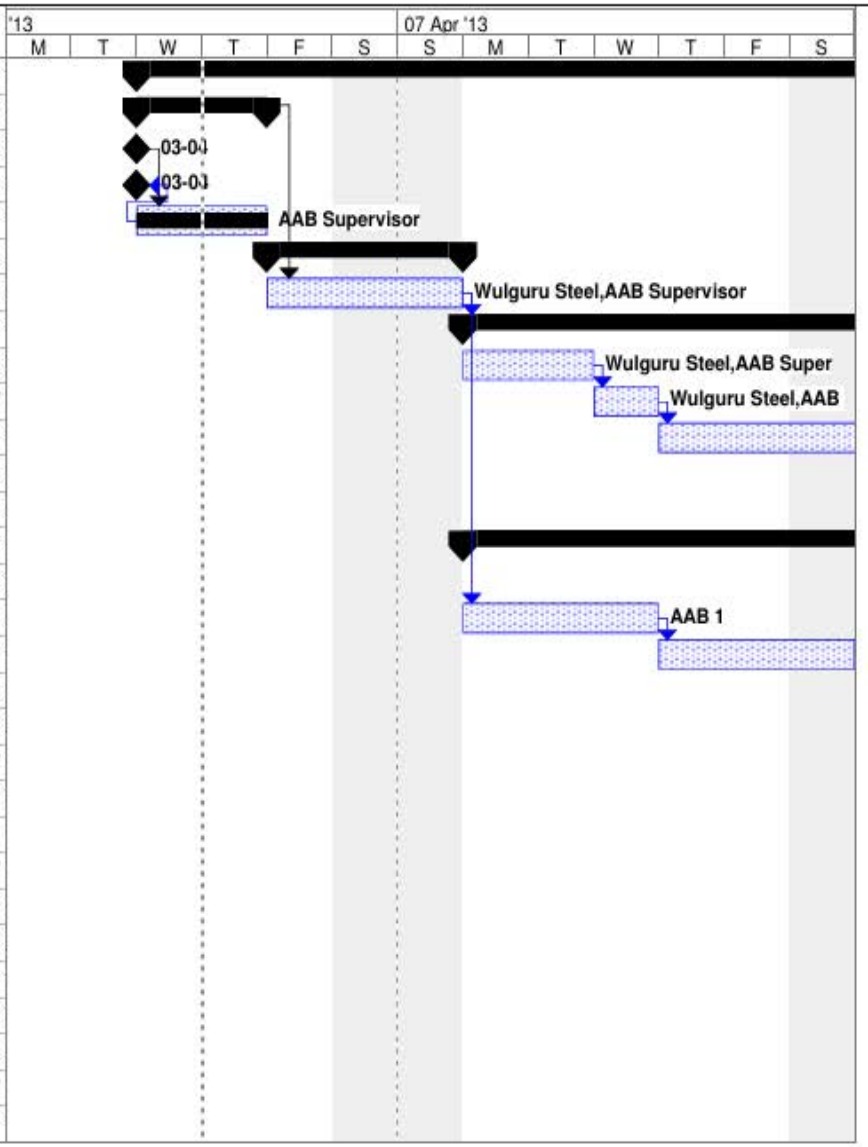

Project: LucindaShipLoaderRailClipRep
Date: Thu 04-04-13

Task | Split | Progress | Milestone | Summary | Project Summary | External Tasks | External Milestone | Deadline